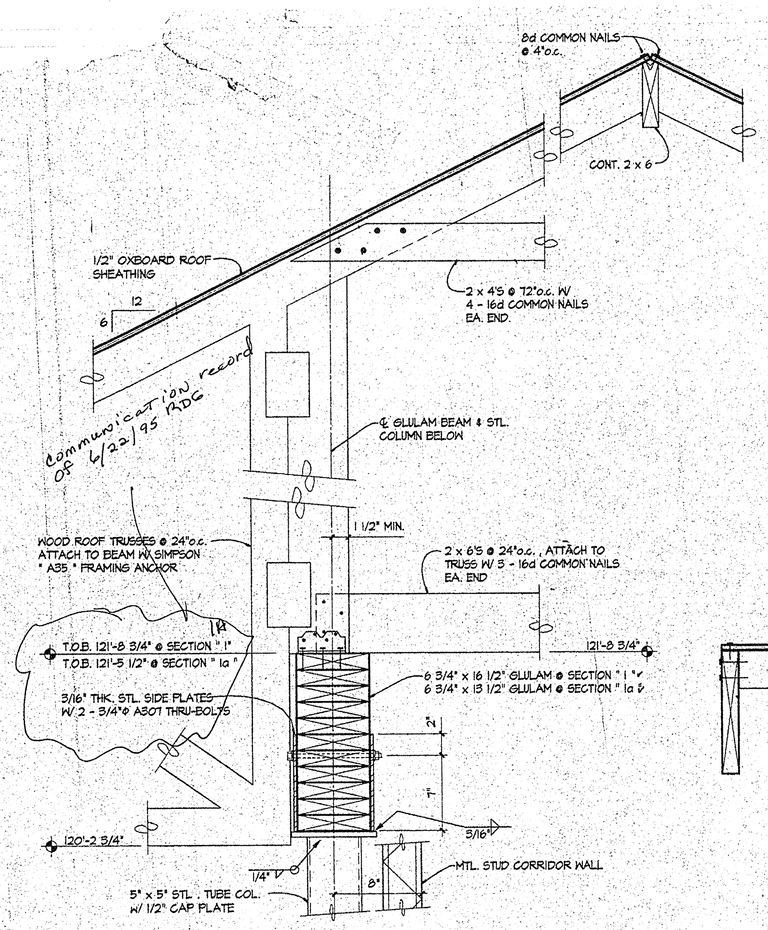

1 1a SECTION
1 1/2" = 1' - 0"

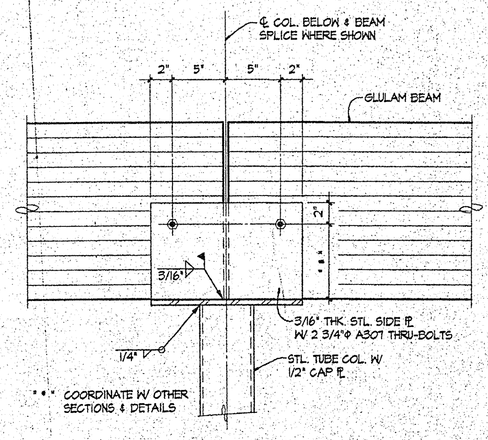

2 SECTION
1 1/2" = 1' - 0"

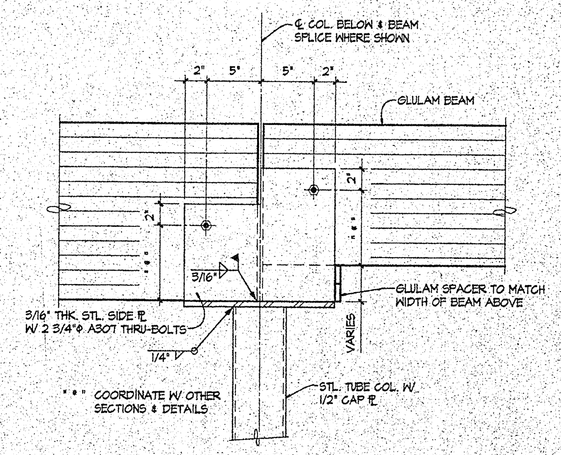

3 SECTION
1 1/2" = 1' - 0"

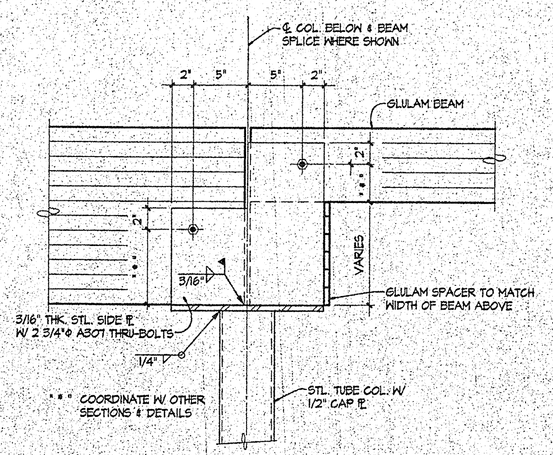

4 SECTION
1 1/2" = 1' - 0"

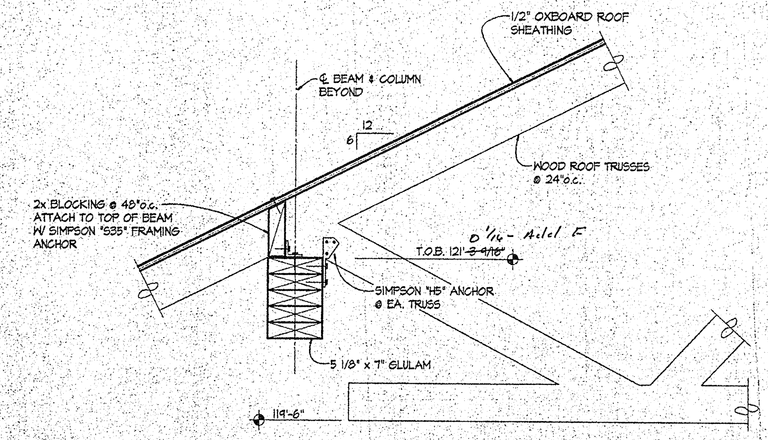

5 SECTION
1 1/2" = 1' - 0"

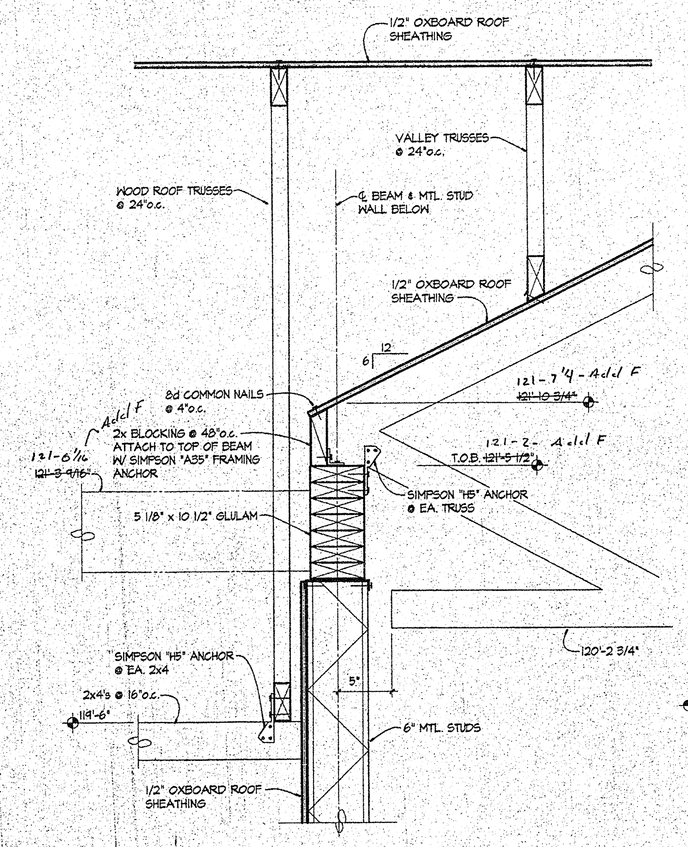

6 SECTION
1 1/2" = 1' - 0"

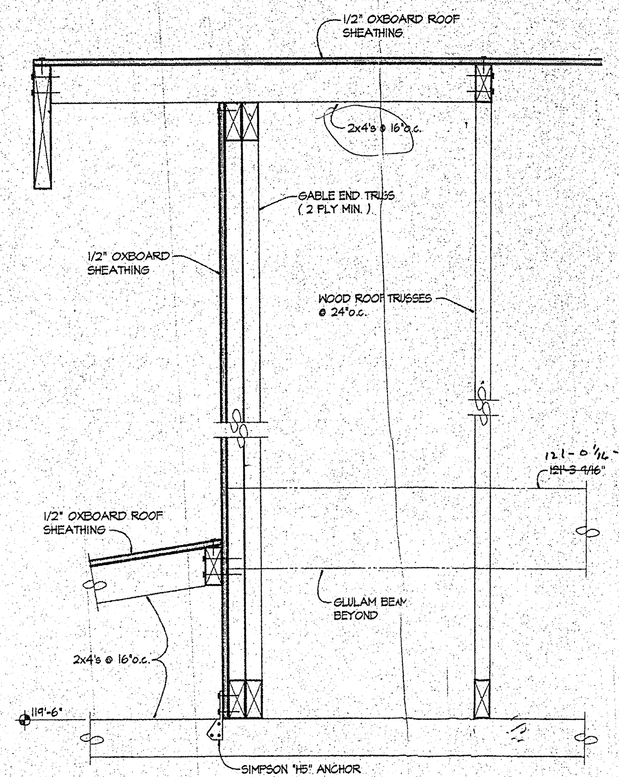

7 SECTION
1 1/2" = 1' - 0"

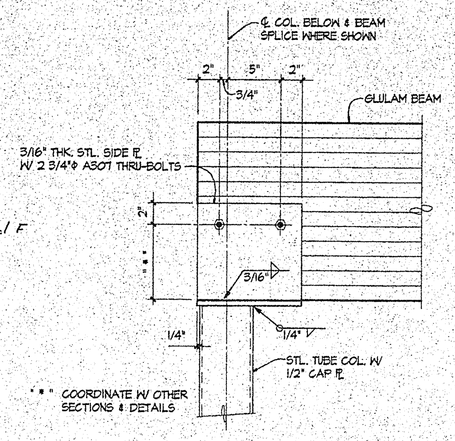

8 SECTION
1 1/2" = 1' - 0"

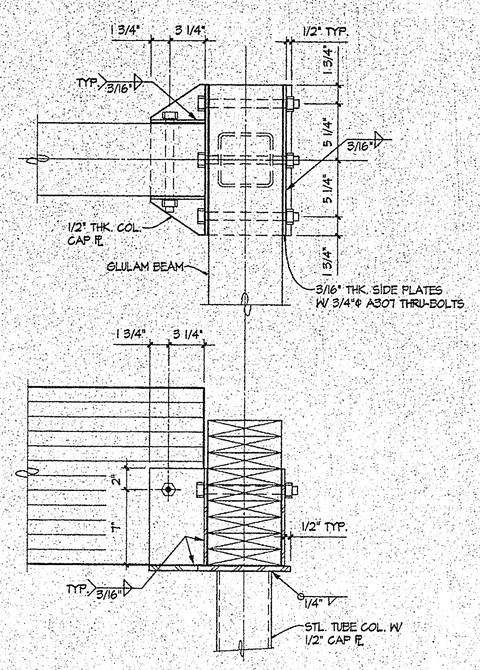

9 SECTION
1 1/2" = 1' - 0"

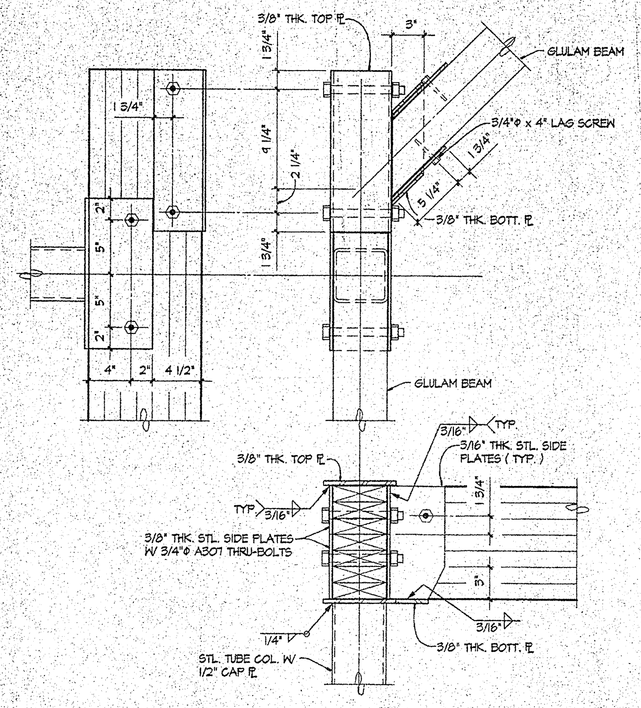

10 SECTION
1 1/2" = 1' - 0"

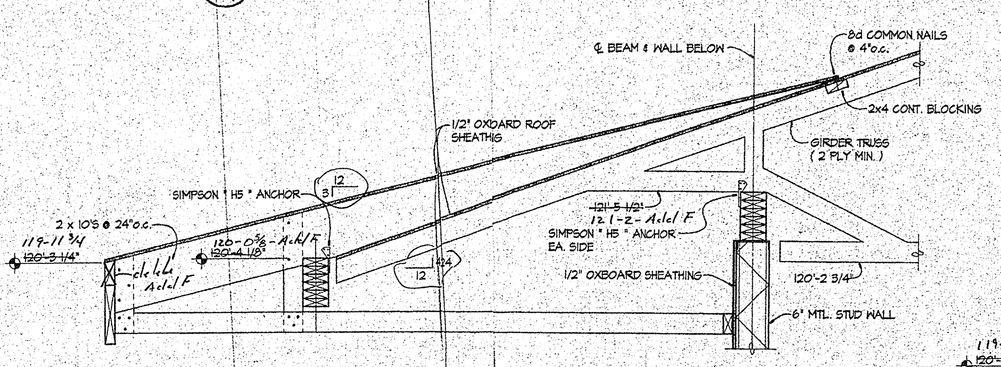

11 SECTION
3/4" = 1' - 0"

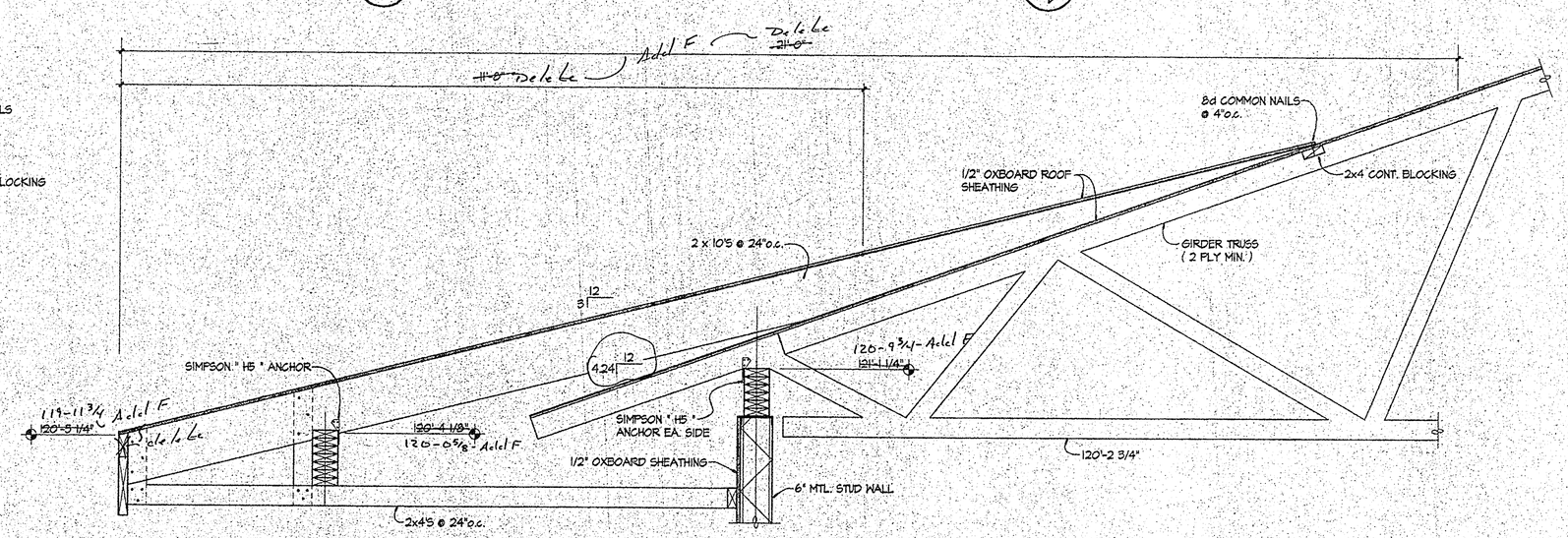

12 SECTION
3/4" = 1' - 0"

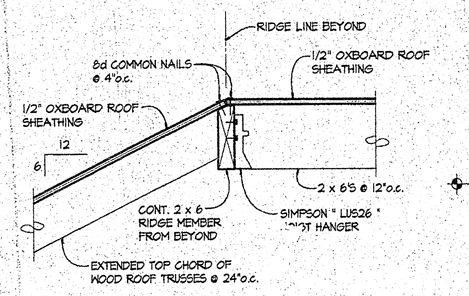

13 SECTION
1 1/2" = 1' - 0"

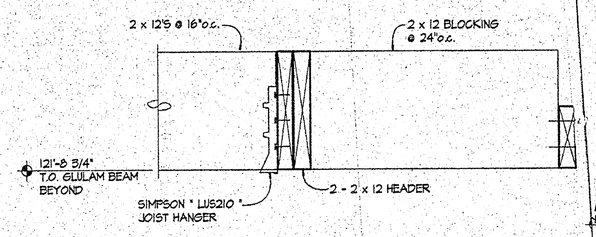

14 SECTION
1 1/2" = 1' - 0"

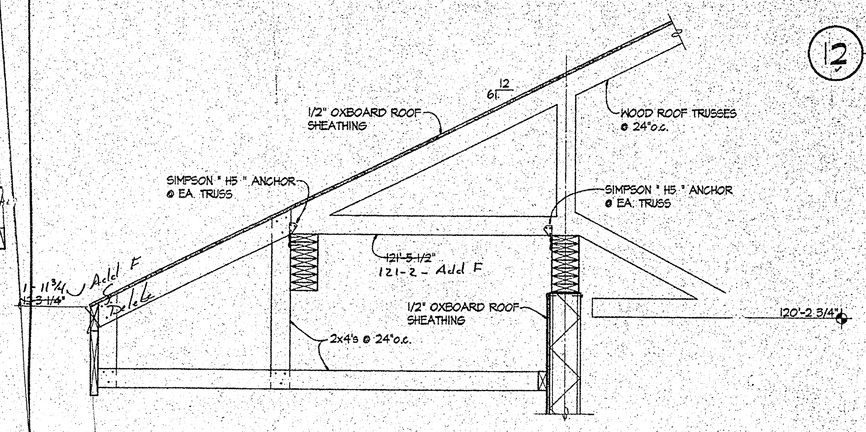

15 SECTION
3/4" = 1' - 0"

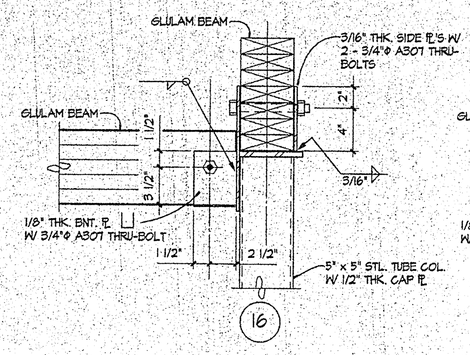

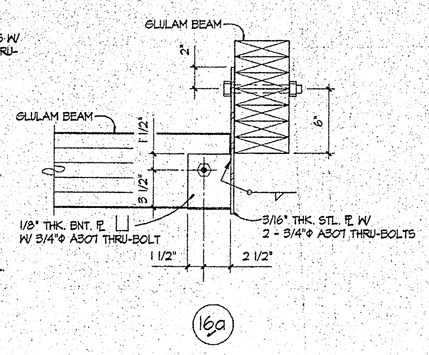

16 16a SECTION
1 1/2" = 1' - 0"

These documents have been prepared for the client named in the title block of this project. They are not suitable for use on other projects or in other locations without the express written approval and participation of RDG Schutte Wilscam Birge, Inc. Reproduction is prohibited.
© RDG Schutte Wilscam Birge

STATE OF NEBRASKA
NELSON J. STEVENS
REG. NO. 19411
LICENSED PROFESSIONAL ENGINEER
CIVIL ENGINEERING

THOMPSON, DREESEN & DORNER, INC.
STRUCTURAL ENGINEERS

RDG Schutte Wilscam Birge
8805 Indian Hills Drive Suite 300 Omaha, Nebraska 68114 402-392-0133 FAX 402-392-0433
ARCHITECTURE INTERIOR DESIGN PLANNING

CHRISTWOOD
A CONTINUING CARE RETIREMENT FACILITY
COVINGTON LOUISIANA

DATE: 25 NOVEMBER 1994
PROJECT #: 9204100
FILE: 215

S6.4

RENAISSANCE DESIGN GROUP • RENAISSANCE DESIGN GROUP • RENAISSANCE DESIGN GROUP • RENAISSANCE DESIGN GROUP • RENAISSANCE DESIGN GROUP • RENAISSANCE DESIGN GROUP • RENAISSANCE DESIGN GROUP • RENAISSANCE DESIGN GROUP