LACP CONNECTION SCHEDULE		
LACP1 (3KVA)		
CKT #1	FUEL MONITOR PANEL	516VA
CKT #2	REC - IT DATA RACK	1800VA
CKT #3	REC - COMM ROOM	360VA
CKT #4	FIRE ALARM CONTROL PANEL	180VA
LACP2 (3KVA)		
CKT #1	REC - GAS DESK	900VA
CKT #2	REC - DIESEL CASH REG.	900VA
CKT #3	REC - DIESEL DESK	540VA
CKT #4	SPARE	--
LACP3 (3KVA)		
CKT #1	REC - OFFICE COMPUTERS	180VA
CKT #2	REC - NETWORK ROUTER	180VA
CKT #3	REC - OFFICE	720VA
CKT #4	SPARE	--

*ALL WIRE SHALL BE #12 CU

CONTACT AMETEK POWERVAR FOR
QUESTIONS RELATED TO INSTALLATION:
NAME: PETER HUSS
PHONE: 847.596.7040
E-MAIL:peter.huss@ametek.com

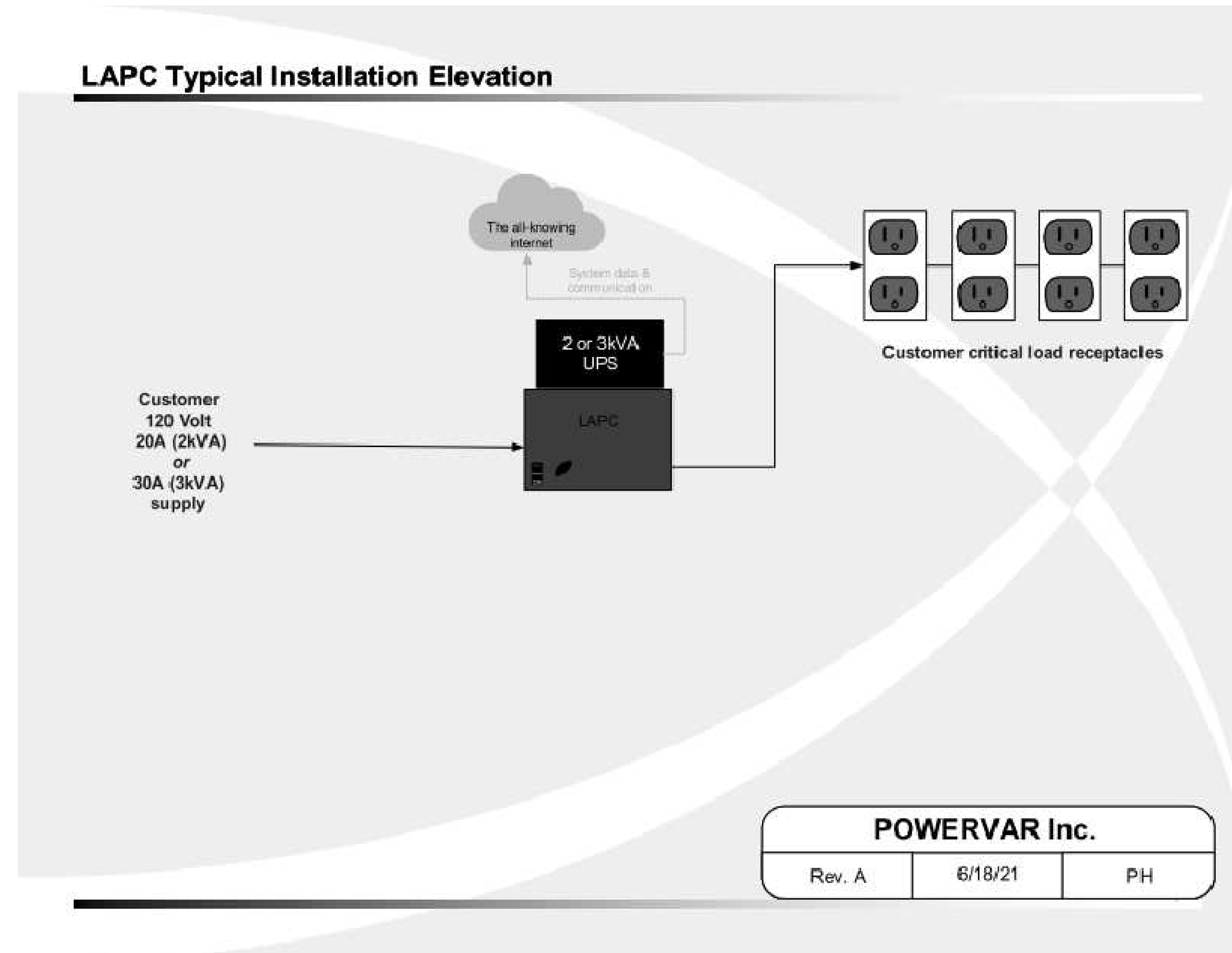

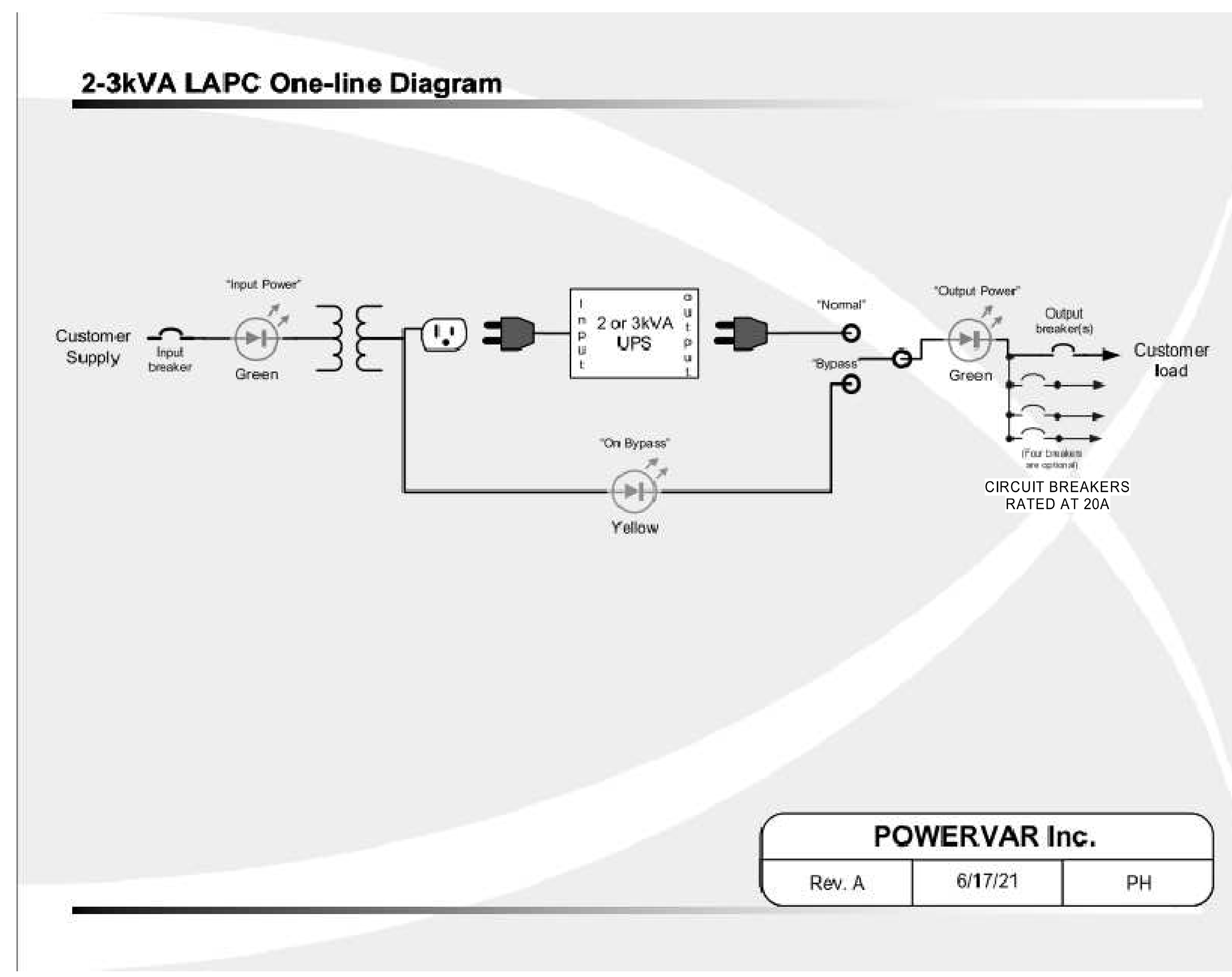

1 LAPC WIRING DIAGRAM

NTD

HFA
HARRISON FRENCH
& ASSOCIATES, LTD

t 479.273.7780

1705 S. Walton Blvd., Suite 3
Bentonville, Arkansas 72712
www.hfa-ae.com

STIPULATION FOR REUSE
THIS DRAWING WAS PREPARED FOR USE ON A SPECIFIC SITE AT NICHOLSON, MS CONTEMPORANEOUSLY WITH ITS ISSUE DATE ON 2/7/2023, AND IT IS NOT SUITABLE FOR USE ON A DIFFERENT PROJECT SITE OR AT A LATER TIME. USE OF THIS DRAWING FOR REFERENCE OR EXAMPLE ON ANOTHER PROJECT REQUIRES THE SERVICES OF PROPERLY LICENSED ARCHITECTS AND ENGINEERS. REPRODUCTION OF THIS DRAWING FOR REUSE ON ANOTHER PROJECT IS NOT AUTHORIZED AND MAY BE CONTRARY TO THE LAW.

Love's
STORE NUMBER: 860
I-59, EXIT 1
NICHOLSON, MS 39466
JOB NUMBER: 03-23-30009
TIER 1 180

ISSUE BLOCK

CHECKED BY:	CAR
DRAWN BY:	SED
DOCUMENT DATE:	2/7/2023
PROTO:	TIER 1 180
PROTO CYCLE:	Q4 - 2022

JAIME CASTANEDA
LICENSED PROFESSIONAL
ENGINEER
28109
2023.02.07 14:23:34-06'00'

ELECTRICAL
DETAILS

SHEET:
E502

2/7/2023 1:06:48 PM
C:\Users\sam.dempster\Documents\2021 Revit Projects\Loves_Nicholson, MS_MEP_T2_180_v21_HFA.Sam.Dempster.rvt
4580-E502-ELECTRICAL DETAILS