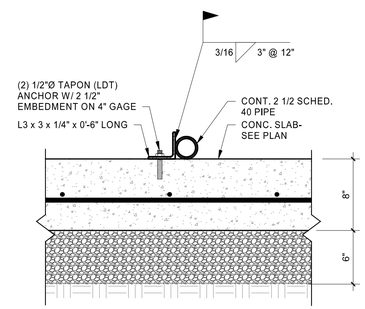

5 SECTION
1 1/2" = 1'-0"

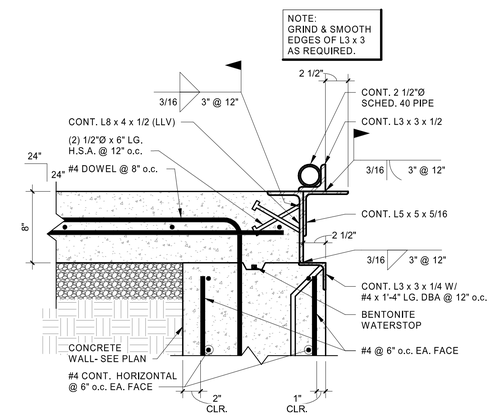

4 SECTION
1 1/2" = 1'-0"

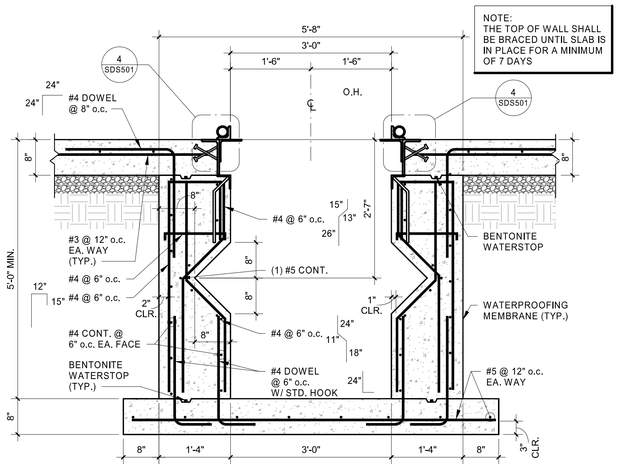

3 SECTION
3/4" = 1'-0"

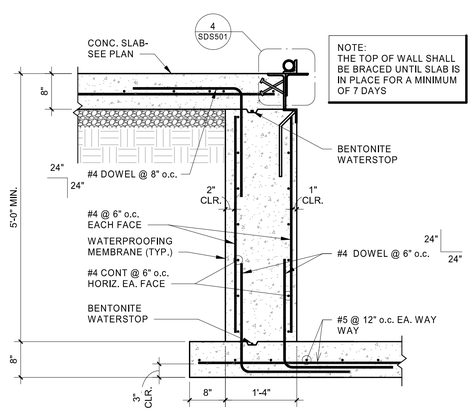

2 SECTION
3/4" = 1'-0"

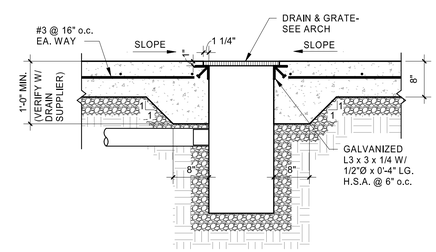

1 DRAIN PIT SECTION
3/4" = 1'-0"

HFA
HARRISON FRENCH & ASSOCIATES, LTD
t 479.273.7780
1705 S. Walton Blvd., Suite 3
Bentonville, Arkansas 72712
www.hfa-ae.com

STIPULATION FOR REUSE
THIS DRAWING WAS PREPARED FOR LOVE'S ARCHITECTURE A NICHOLSON, MISSISSIPPI COUNTY, MISSISSIPPI ISSUED FOR CONSTRUCTION WITH ITS ISSUE DATE ON: 2/06/23 AND IT IS NOT INTENDED FOR REUSE ON OTHER PROJECT SITE OR AT A LATER TIME. SUCH REUSE IS AT THE RECIPIENT'S SOLE RISK AND WITHOUT LIABILITY OR EXAMPLE ON ANOTHER PROJECT. REPRODUCTION OF THIS DRAWING FOR LICENSED ARCHITECTS AND ENGINEERS. REPRODUCTION OF THIS DRAWING FOR OTHER PURPOSES IS PROHIBITED WITHOUT AUTHORIZED AND MAY BE CONTRARY TO THE LAW.

Love's

STORE NUMBER: 860
I-59, EXIT 1
NICHOLSON, MS 39463
JOB NUMBER: 03-23-30903

ISSUE BLOCK

CHECKED BY:	LST
DRAWN BY:	CRM
DOCUMENT DATE:	02/06/23

LUNGSHEN TSAO
LICENSED PROFESSIONAL ENGINEER
20847
STATE OF MISSISSIPPI
2023.02.06 10:21:09-06'00'

PIT DETAILS

SHEET:
SDS501

2/3/2023 9:32:48 AM
C:\Users\chuck.may\Documents\2021 Revit Projects\Loves_Nicholson_MS_STR_SPREDOCS_4B_v21_HFA_Chuck.May.rvt
B005-SDS501-PIT DETAILS