SITE LEGEND

- PROPERTY LINE
- BUILDING SETBACK MINIMUM
- BUILDING OUTLINE
- HANDICAP PARKING
- HANDICAP PARKING SIGN

NOTE:
PAVEMENT IN ALL PARKING AREAS SHALL BE 5" THICK CONCRETE.

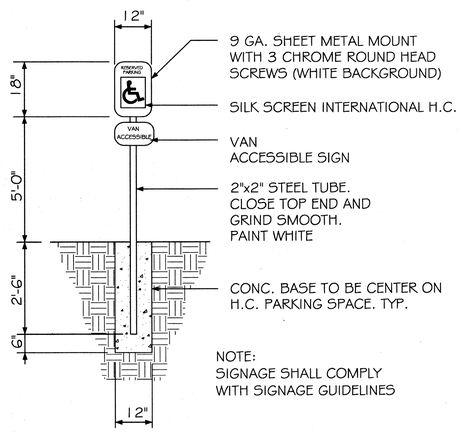

HANDICAP PARKING SIGN

N. T. S.

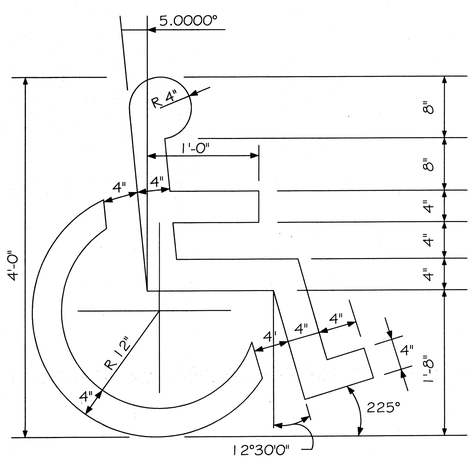

HANDICAP SYMBOL DETAIL

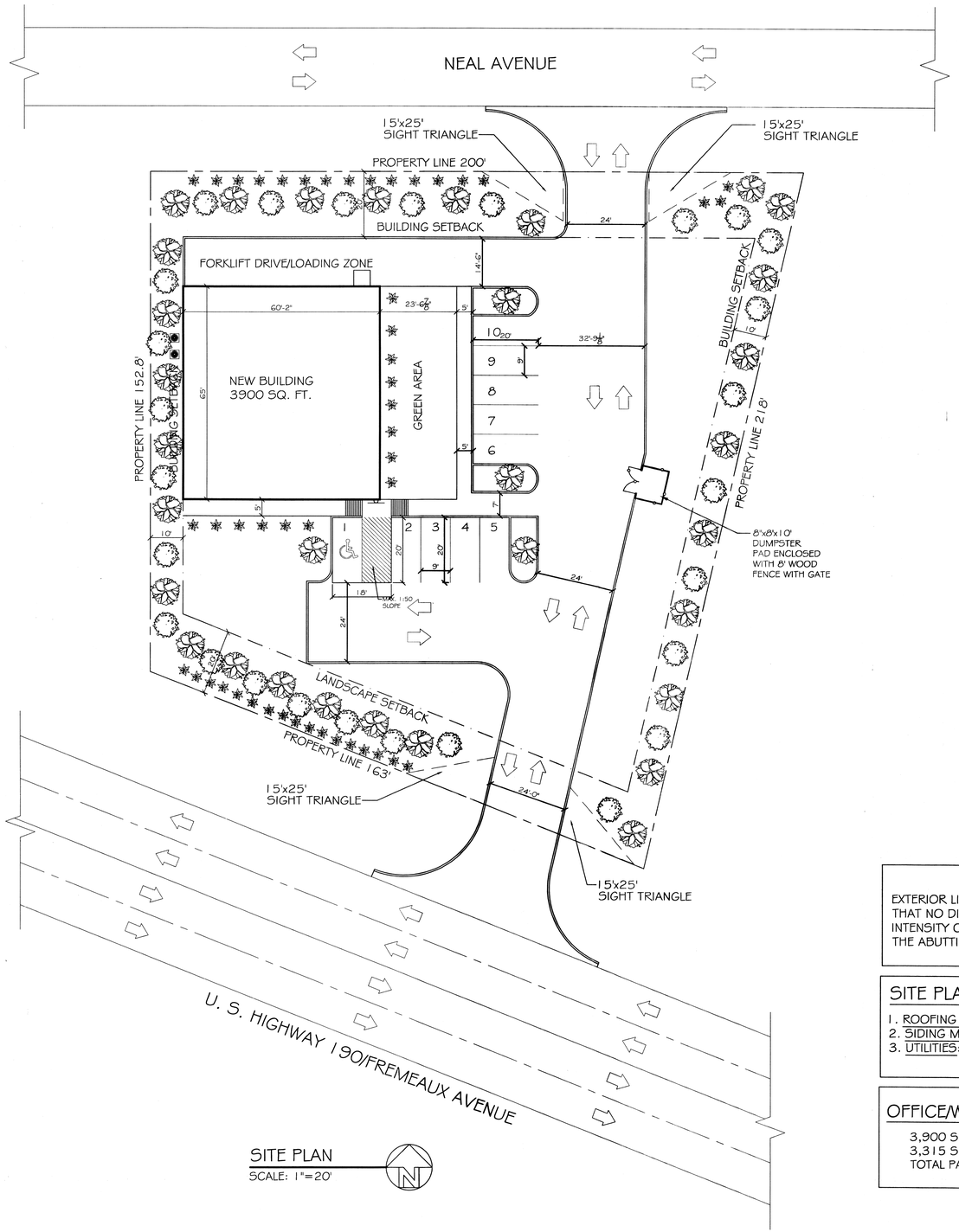

SITE PLAN

SCALE: 1"=20'

ST. TAMMANY PARISH LANDSCAPE REQUIREMENTS:

TREE AND ROOT PROTECTION STANDARDS:
PROTECTIVE BARRIERS, TYPE REQUIRED. PRIOR TO GRADING, CONSTRUCTION OR OTHER LAND DISTURBING ACTIVITY, PROTECTIVE BARRIERS SHALL BE INSTALLED IN ACCORDANCE WITH THE PROVISIONS OF SECTION 5.1605 D BELOW. BARRIERS SHALL INCLUDE, BUT NOT BE LIMITED TO, TEMPORARY FENCING. THIS FENCING SHALL BE CONSTRUCTED FROM ANY HIGHLY VISIBLE MATERIAL SUBSTANTIAL ENOUGH TO PROTECT THE ROOTS, TRUNK AND CROWN OF THE TREES, SUCH AS SILT FENCING, ORANGE SAFETY FENCING AND WIRE FENCING.

STREET PLANTING AREA:
A STREET PLANTING AREA IS THE AREA ALONG THE STREET (OR STREETS) OR ROAD (OR ROADS) ALONG WHICH A PROPERTY ABUTS WHICH IS DESIGNATED FOR THE PRESERVATION OF TREES AND FOR LANDSCAPING. IF A PROPERTY ABUTS ONLY ONE STREET OR ROAD, THE STREET PLANTING AREA SHALL BE 30 FEET WIDE. THE FOLLOWING MINIMUM NUMBER OF TREES
AND SHRUBS SHALL BE PLANTED IN THE STREET PLANTING AREA: 1 CLASS A TREE FOR EVERY 25' OF STREET FRONTAGE, 1 CLASS B TREE FOR EVERY 25' OF STREET FRONTAGE, 1 SHRUB FOR EVERY 10 FEET OF STREET FRONTAGE.

LA HWY 433 STREET PLANTING AREA: (163 FEET OF ROAD FRONTAGE)
CLASS A TREES: 163/25 = 6.52 (USE 7 CLASS A TREES)
CLASS B TREES: 163/25 = 6.52 (USE 7 CLASS B TREES)
SHRUBS: 163/10 = 17

SIDE AND REAR BUFFER PLANTING AREA REQUIREMENTS:
BUFFER PLANTING AREA WIDTH SHALL BE A MINIMUM OF TEN FEET. TREES REQUIRED IF UNENCUMBERED BY UTILITY SERVITUDE: CLASS A TREES ONE (1) FOR EACH 30 LINEAR FEET OF THE BUFFER PLANTING AREA, AND CLASS B TREES ONE (1) FOR EACH 30 LINEAR FEET OF THE BUFFER PLANTING AREA.

WEST BUFFER AREA: (152.8 LINEAR FEET)
CLASS A TREES: 152.8/30 = 5.09 (USE 6 CLASS A TREES)
CLASS B TREES: 152.8/30 = 5.09 (USE 6 CLASS B TREES)
EAST BUFFER AREA: (218 LINEAR FEET)
CLASS A TREES: 218/30 = 7.26 (USE 8 CLASS A TREES)
CLASS B TREES: 218/30 = 7.6 (USE 8 CLASS B TREES)
REAR BUFFER AREA: (200 LINEAR FEET)
CLASS A TREES: 200/30 = 6.6 (USE 7 CLASS A TREES)
CLASS B TREES: 200/30 = 6.6 (USE 7 CLASS B TREES)

BUILDING FACADE PLANTING AREA:
THE BUILDING FACADE AREA SHALL BE LOCATED ALONG THE FULL LENGTH OF THE BUILDING EXTERIOR WALL(S) FACING THE VEHICULAR ACCESS AREA(S). THIS AREA SHALL BE NO LESS THAN FOUR (4) FEET IN WIDTH.

PARKING LANDSCAPING REQUIREMENTS:
LOCATION OF SHRUBS WITHIN STREET PLANTING AREA. SHRUBS SHALL BE LOCATED WITHIN THE STREET PLANTING AREA IN A ROW (STRAIGHT OR CURVILINEAR) OR CLUSTERS TO ACHIEVE SCREENING. SHRUBS SHALL BE PLANTED 2 ½ FEET APART OR CLOSER, EXCEPT THAT IF SHRUBS ARE PLANTED IN CLUSTERS, THE CLUSTERS SHALL BE 4 FEET APART OR CLOSER. NO SHRUB SHALL BE PLANTED UNLESS IT WILL REACH THREE (3) FEET IN HEIGHT WITHIN TWO (2) YEARS AFTER PLANTING, AND, THEREAFTER, SHRUBS SHALL BE MAINTAINED AT THREE (3) FEET IN HEIGHT OR HIGHER.

SPECIFIC INTERIOR PARKING LANDSCAPE REQUIREMENTS:
LANDSCAPE ISLANDS WITHIN ROWS. NO MORE THAN TWELVE (12) PARKING SPACES SHALL BE PERMITTED IN A CONTINUOUS ROW WITHOUT BEING INTERRUPTED OR TERMINATED BY A LANDSCAPED ISLAND OR MEDIAN OF NOT LESS THAN SIX (6) FEET IN WIDTH (EXCLUSIVE OF CURBS) AND NOT LESS THAN THE LENGTH OF THE PARKING SPACE. LANDSCAPE ISLANDS AT END OF ROWS. EVERY PARKING ROW SHALL TERMINATE IN A LANDSCAPED ISLAND OF NOT LESS THAN NINE (9) FEET IN WIDTH (INCLUDING THE CURBS) AND NOT LESS THAN THE LENGTH OF THE PARKING SPACE; PROVIDED THAT, A LANDSCAPE ISLAND SHALL NOT BE REQUIRED AT THE END OF A PARKING ROW WHERE THE END OF THE PARKING ROW ABUTS A STREET PLANTING AREA OR BUFFER PLANTING AREA. REQUIRED PLANTS. THE LANDSCAPED ISLANDS SHALL CONTAIN A MINIMUM OF ONE (1) CLASS A TREE. ONE (1) CLASS A TREE FOR EVERY 30 LINEAR FEET SHALL BE PLANTED IN THE REQUIRED MEDIAN BETWEEN ROWS. THE SURFACE OF THE LANDSCAPED ISLANDS AND MEDIANS SHALL BE PLANTED IN A LIVING VEGETATIVE GROUND COVER.

LANDSCAPE LEGEND

- RED MAPLE
CLASS A: ANY SELF-SUPPORTING WOODY PLANT OF A SPECIES WHICH NORMALLY GROWS TO AN OVERALL HEIGHT OF A MINIMUM OF FIFTY (50) FEET, USUALLY WITH ONE MAIN STEM OR TRUNK ALTHOUGH SOME SPECIES MAY HAVE MULTIPLE TRUNKS, AND WITH MANY BRANCHES.

ALL CLASS "A" TREES, AT THE TIME OF PLANTING, SHALL HAVE A MINIMUM CALIPER OF AT LEAST TWO AND ONE-HALF (2½) INCHES, MEASURED SIX (6") INCHES ABOVE THE ROOT BALL, AND A MINIMUM HEIGHT OF 10-12 FEET, AS PER THE NATIONAL NURSERY ASSOCIATION STANDARDS.

- CREPE MYRTLE
CLASS B: ANY SELF-SUPPORTING WOODY PLANT OF A SPECIES WHICH NORMALLY GROWS TO AN OVERALL HEIGHT OF A MINIMUM OF TWENTY-FIVE (25) FEET, WITH ONE OR MORE MAIN STEM(S) OR TRUNK(S) AND MANY BRANCHES.

ALL CLASS "B" TREES AND ALL TREES, OTHER THAN CLASS "A" TREES, AT THE TIME OF PLANTING, SHALL HAVE A MINIMUM CALIPER OF AT LEAST ONE AND ONE-HALF (1½)INCHES MEASURED (6") SIX INCHES ABOVE THE ROOT BALL AND A MINIMUM HEIGHT OF 8-10 FEET AS PER THE NATIONAL NURSERY ASSOCIATION STANDARDS.

- INDIAN HAWTHORNE
SHRUB: A RELATIVELY LOW-GROWING BUSHY PLANT, USUALLY WITH WOODY STEMS. FOR THE PURPOSES OF THIS DEFINITION, GROUND COVER, TREES AND ANNUALS ARE NOT CONSIDERED SHRUBS.

ALL SHRUBS, AT THE TIME OF PLANTING, SHALL HAVE A MINIMUM HEIGHT OF TWO (2) FEET.

- ASIAN JASMINE GROUNDCOVER

- GRASS SOD

SITE LIGHTING

EXTERIOR LIGHTING SHALL BE SHADED OR INWARDLY DIRECTED IN SUCH A MANNER SO THAT NO DIRECT LIGHTING OR GLARE BE CAST BEYOND THE PROPERTY LINE. THE INTENSITY OF SUCH LIGHTING SHALL NOT EXCEED ONE FOOT CANDLE AS MEASURED AT THE ABUTTING PROPERTY LINE. (N/A FOR THIS PARTICULAR JOB)

SITE PLAN NOTES

1. ROOFING MATERIAL: METAL ROOFING PANEL
2. SIDING MATERIAL: CONVENTIONAL STUCCO VENEER & METAL PANELS.
3. UTILITIES: ALL UTILITIES SHALL BE PLACED UNDERGROUND

OFFICE/WAREHOUSE PARKING REQUIREMENTS

3,900 SF BUILDING TOTAL MINUS 15% (585) = 3,315 SF
3,315 SF TOTAL @ 400 SF/SPACE = 9 SPACES REQUIRED
TOTAL PARKING REQUIRED = 9 SPACES (1 HANDICAP)

423682

REVIEWED FOR
STATE FIRE MARSHAL
AS PER REVIEW LETTER
BY: WILLIAM D. JONES, ARCHITECT, CBO

DAMMON ENGINEERING INC
Architects & Engineers
dammoneng.com
dammoneng@bellsouth.net
PHONE: 985-649-5832
FAX: 985-641-5950

CHIEF ENGINEER: EMMETT DAMMON, P.E.
CHIEF ARCHITECT: ROBERT WILTSE
534 OLD SPANISH TRAIL
SLIDELL, LA 70458

The above drawings are the property of Dammon Engineering and shall not be reproduced, altered or assigned to any other person or company without the written consent of Dammon Engineering. Visual contact with these drawings shall constitute conclusive evidence of acceptance of these restrictions.

RAY HORVATH FLOORWORKS AND BLINDS
RETAIL
1360 SHORTCUT ROAD
SLIDELL, LA 70458

JOB No:	2152	DATE:	10-23-12
DRAWN BY:	BSN	CHECKED BY:	BSN

#	DESCRIPTION	REVISIONS	DATE

SITE PLAN

SHEET No: 2 OF 9

C-1