PAVING NOTES:

1) ALL NEW CONCRETE SHALL SHALL HAVE A MINIMUM COMPRESSIVE STRENGTH OF 4,000 PSI AT 28 DAYS AND A MINIMUM THICKNESS OF 5". CONCRETE MIX SHALL BE IN ACCORDANCE WITH THE LATEST REVISION OF ASTM C-150 TYPE 1.
2) CONCRETE PAVING THICKNESS SHALL VARY AS FOLLOWS:
   a) APRONS = 7" THICKNESS
   b) DRIVELANES = 6" THICKNESS
   c) PARKING AREAS = 5" THICKNESS
3) ALL REINFORCING STEEL SHALL MEET ASTM-A615 (GRADE 60).
4) ALL REINFORCING STEEL SHALL BE SECURELY SUPPORTED TO PREVENT BOTH VERTICAL AND HORIZONTAL MOVEMENT DURING CONCRETE PLACEMENT. ALL CONTROL AND EXPANSION JOINTS SHALL BE LOCATED AND INSTALLED AS SHOWN ON THE PAVING PLAN AND IN ACCORDANCE WITH THE MANUFACTURER'S RECOMMENDATIONS.
5) ALL SUB GRADE FILL SHALL BE SELECT GRANULAR MATERIAL COMPACTED TO 95% STANDARD PROCTOR DENSITY IN A MAXIMUM OF 6" LIFTS.
6) CONTRACTOR SHALL CONTACT THEIR REGULATORY DEPARTMENT OF ENGINEERING PRIOR TO CONDUCTING ANY WORK.
7) ANY WORK WITHIN THE ROADWAY OR ADJACENT TO THE ROADWAY CAUSING AN INTERFERENCE TO VEHICULAR TRAFFIC REQUIRES PRIOR APPROVAL FROM THE CITY TRAFFIC ENGINEERING DIVISION, AND MUST CONFORM TO THE REQUIREMENTS SET FORTH BY THE UNIFORM MANUAL OF TRAFFIC CONTROL DEVICES OF THE STATE OF LOUISIANA. THE CONTRACTOR MUST FURNISH ALL NECESSARY TRAFFIC SIGNS AND/OR BARRICADES AND MAINTAIN THEM DURING CONSTRUCTION ACTIVITY.

LEGEND

- PROPERTY LINE
- SETBACK LINE
- BUFFER ZONE LINE
- UTIL. EASEMENT LINE
- CJ — CONTROL JT. 10'x15'
- EJ — EXPANSION JT. 30'x45'
- SHEET FLOW ARROW
- (#)0.00' — INVERT ELEVATION
- # 0.00' — TOP OF GRATE ELEVATION
- 00.00 — NEW ELEVATION

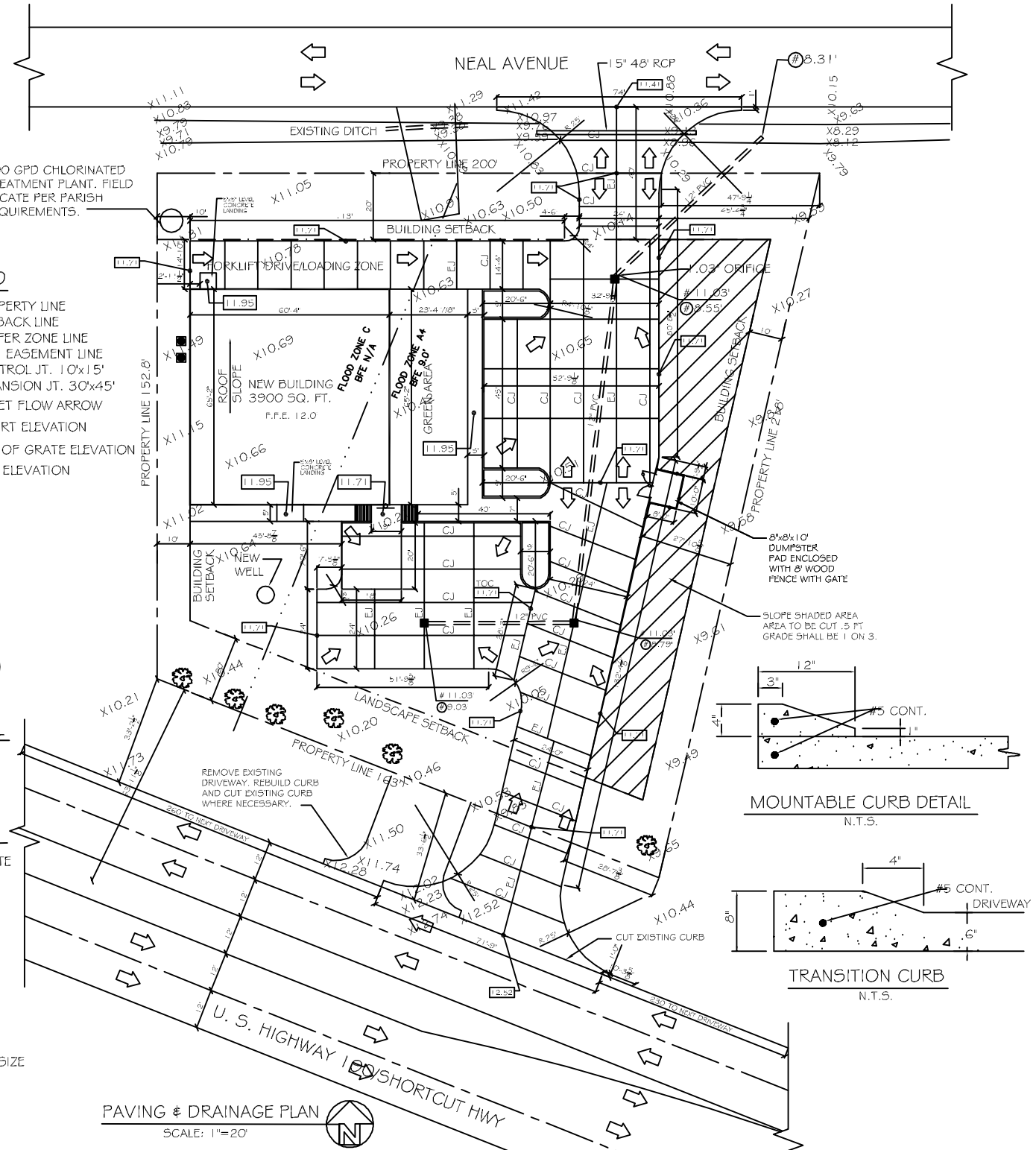

PAVING & DRAINAGE PLAN

SCALE: 1"=20'

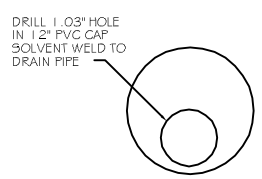

ORIFICE DETAIL

N.T.S.

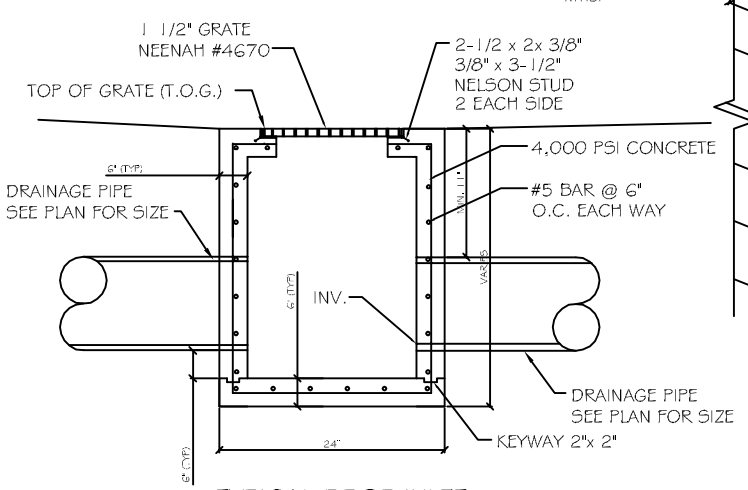

TYPICAL DROP INLET

N.T.S.

MOUNTABLE CURB DETAIL

N.T.S.

TRANSITION CURB

N.T.S.

PROJECT:	RAY HORVATH BUILDING

STORMWATER RUN-OFF CALCULATIONS

Formulas used:

[1] RATIONAL METHOD: Q=AcI

where:
Q= Peak discharge of watershed in cubic feet per second (cfs) due to maximum storm assumed.
A= Area of watershed in acres.
c= Coefficient of run-off [2].
I= Intensity of rainfall in inches per hour based on concentration time. [3]

[4] TC=

where:
TC= Time of concentration= time required for rain falling at most remote point to reach discharge point.
c= Site run-off coefficient based on conditions shown.
s= Percent slope of overland flow.

PRIOR DEVELOPMENT
25 Year Frequency

Q. = Ac

Watertight Surfaces		838	sqft =	0.019	Acres
	c(1) = 0.9				
Gravel Surface		3554	sqft =	0.082	Acres
	c(2) = 0.25				
Green Space		28428	sqft =	0.653	Acres
	c(3) = 0.15				
Summary		32820	sqft =	0.753	Acres
	c = 0.18				

Duration (D) = Time of concentration (TC)

where	L = 218	run-off length ft	Elev diff =1.4
	c = 0.18	run-off coef	
	S = 0.6422	percent slope	
therefore	TC = D =21.80	minutes	
Expected rainfall Intensity	i = 3.64	in/hr	

Q. = 0.494 cfs 10% reduction **0.049 cfs**

POST DEVELOPMENT
25 Year Frequency

Q. = Ac

Watertight Surfaces		18018	sqft =	0.414	Acres
	c(1) = 0.9				
Gravel Surface		0	sqft =	0.000	Acres
	c(2) = 0.25				
Green Space		14712	sqft =	0.338	Acres
	c(3) = 0.15				
Summary		32730	sqft =	0.751	Acres
	c = 0.56				

Duration (D) = Time of concentration (TC)

where	L = 205	run-off length ft	Elev diff =0.1
	c = 0.56	run-off coef	
	S = 1.5122	percent slope	
therefore	TC = D =14.30	minutes	
Expected rainfall Intensity	i = 3.64	in/hr	

Q. = 1.539 cfs

DETENTION REQUIREMENTS

Detention required=Q-Q 1.05cfs
ONE HOUR DETENTION 3765.2cuft
DETENTION DIMENSIONS WIDTH 60 feet
LENGTH 92 feet
DEPTH **0.68 feet**

DISCHARGE END AREA REQUIREMENTS

where:
A= Discharge Area required
g=Acceleration of gravity
c=Discharge coefficient
h= Hydraulic head
Q= Flow volume from run-off

Pipe Servicing Site Drainage

Q =	0.049 cfs	h =	3.00 feet
c =	0.82coefficient	A =	0.006sqft
g =	32.16ft/sec/sec		

REQUIRED CONDUIT = 1.03inch inside diameter

DRAINAGE PLAN NOTES:

1. DRAIN PIPE & FITTINGS WITHIN PROPERTY LINE SHALL BE POLYVINYL CHLORIDE PLASTIC PIPE, MEETING CLASS 100 C-900 PVC.
2. ELEVATIONS SHOWN ARE M.S.L.
3. FIELD VERIFY ALL ELEVATIONS AND DRAINAGE SYSTEM PLACEMENT PRIOR TO START OF WORK.
4. THERE IS NO EVIDENCE OF EXISTING OFF-SITE FLOW CROSSING THE PROPERTY.

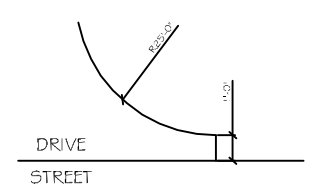

TYPICAL ENTRANCE DETAIL

N.T.S.

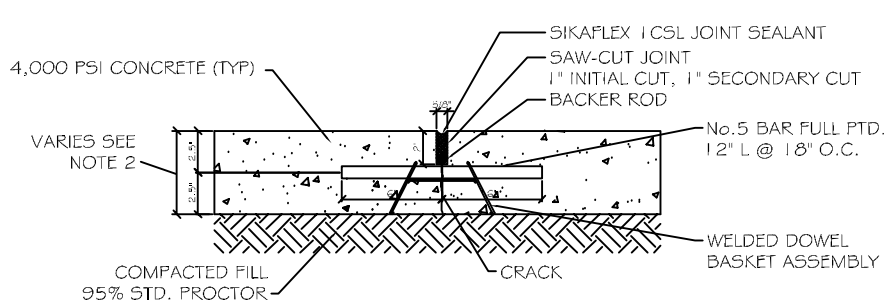

CONTROL JOINT DETAIL

N.T.S.

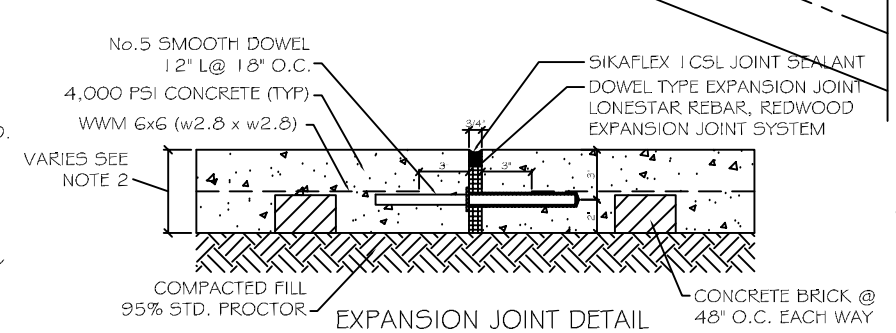

EXPANSION JOINT DETAIL

N.T.S.

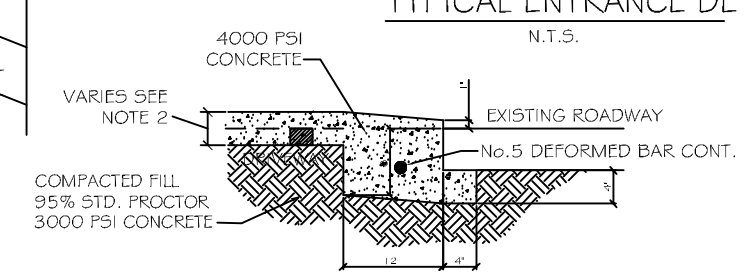

DRIVEWAY SECTION

N. T. S.

DAMMON ENGINEERING, INC.
Architects & Engineers
damon@dammon-eng.com
damon@bellsouth.net
PHONE: 985-649-5032
FAX: 985-641-5950
CHIEF ENGINEER: EMMETT DAMMON, P.E.
CHIEF ARCHITECT: ROBERT WALTSE
554 OLD SPANISH TRAIL
SLIDELL, LA 70458

Drawings and specifications as instruments of service are the property of Dammon Engineering, Inc. and are not to be used in any other work except by agreement in writing and with appropriate compensation to Dammon Engineering, Inc. Reproduction or publication of these drawings and specifications, in whole or in part, without the written consent of Dammon Engineering, Inc. is prohibited.

RAY HORVATH FLOORWORKS AND BLINDS
RETAIL
1,960 SHORTCUT HWY
SLIDELL, LA 70458

JOB No:	2152	DATE:	11-13-12
DRAWN BY:	BSN	CHECKED BY:	BSN

#	DESCRIPTION	DATE
	REVISIONS	

PAVING AND DRAINAGE PLAN

SHEET No: 3 OF 10

C-2