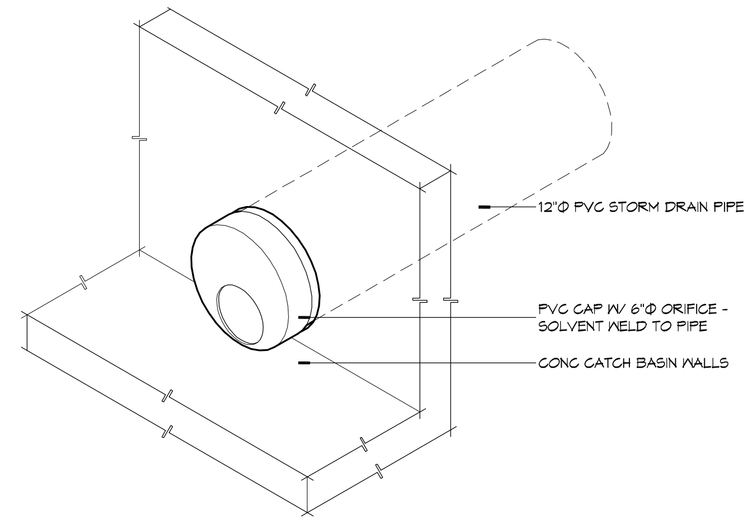

6 ORAFICE DETAIL
SCALE: NTS — END CAP

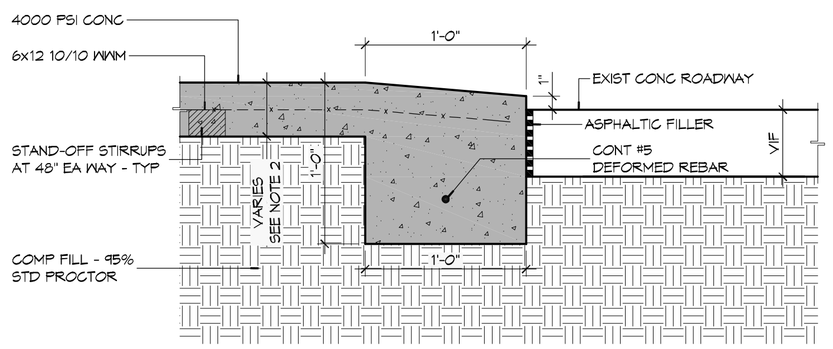

5 TYPICAL PAVING DETAIL
SCALE: 1 1/2" = 1'-0" — DRIVEWAY W/ ROLLOVER CURB

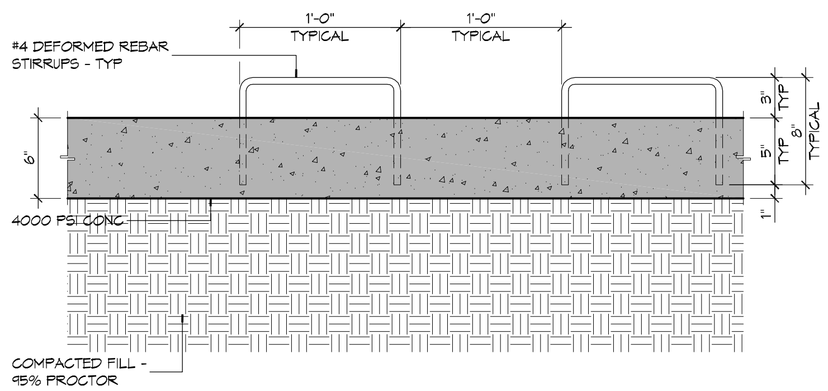

4 TYPICAL PAVING DETAIL
SCALE: 1 1/2" = 1'-0" — CURB DOWELS

6" MTL KEYWAY JOINT SYSTEM NOTE:
LONGITUDINAL JOINTS: No.5 DEFORMED
DOWEL ROD 24" L @ 24" O.C.
TRANSVERSE JOINTS: No.5 SMOOTH
DOWEL ROD 24" L @ 24" O.C.

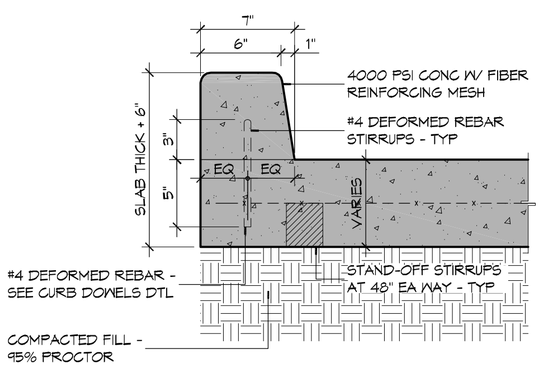

3 TYP PAVING DTL
SCALE: 1 1/2" = 1'-0" — 6" CONCRETE BARRIER CURB

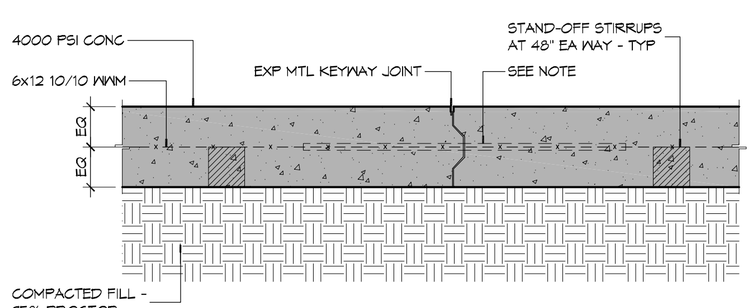

2 TYPICAL PAVING DETAIL
SCALE: 1 1/2" = 1'-0" — KEYWAY JOINT

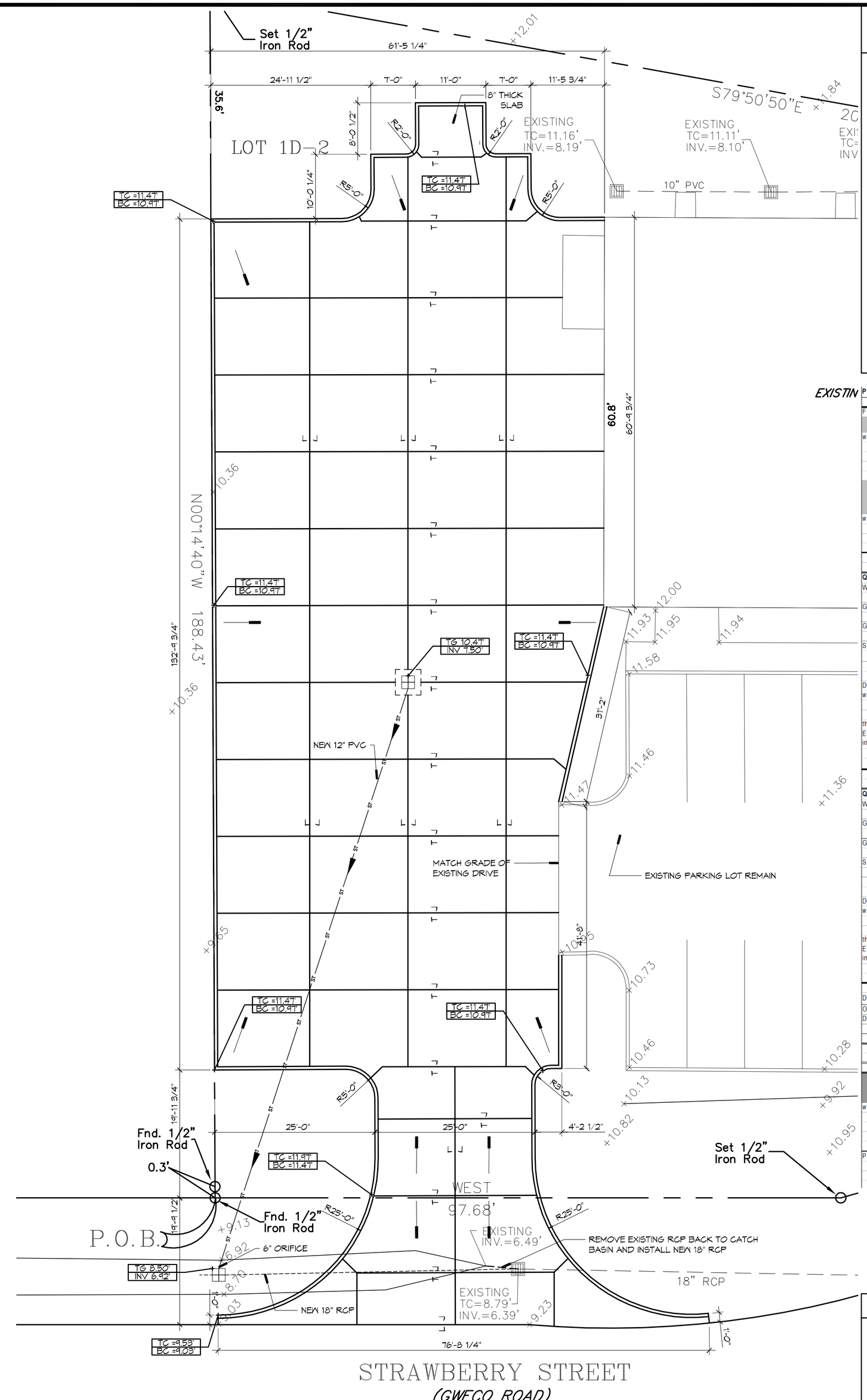

1 PAVING PLAN
SCALE: 1" = 10' — Subtitle

GENERAL PAVING NOTES

1. ALL NEW CONCRETE SHALL SHALL HAVE A MINIMUM COMPRESSIVE STRENGTH OF 4,000 PSI AT 28 DAYS AND A MINIMUM THICKNESS OF 6". CONCRETE MIX SHALL BE IN ACCORDANCE WITH THE LATEST REVISION OF ASTM C-150 TYPE 1.
2. CONCRETE PAVING THICKNESS SHALL VARY AS FOLLOWS:
   a. APRONS & LOADING AREAS = 8" THICKNESS
   b. DRIVE LANES & PARKING AREAS = 6" THICKNESS
3. ALL REINFORCING STEEL SHALL MEET ASTM-A615 (GRADE 60).
4. ALL REINFORCING STEEL SHALL BE SECURELY SUPPORTED TO PREVENT BOTH VERTICAL AND HORIZONTAL MOVEMENT DURING CONCRETE PLACEMENT. ALL CONTROL AND EXPANSION JOINTS SHALL BE LOCATED AND INSTALLED AS SHOWN ON THE PAVING PLAN AND IN ACCORDANCE WITH THE MANUFACTURER'S RECOMMENDATIONS.
5. ALL SUB GRADE FILL SHALL BE SELECT GRANULAR MATERIAL COMPACTED TO 95% STANDARD PROCTOR DENSITY IN A MAXIMUM OF 6" LIFTS.
6. CONTRACTOR SHALL CONTACT THEIR REGULATORY DEPARTMENT OF ENGINEERING PRIOR TO CONDUCTING ANY WORK.
7. ANY WORK WITHIN THE ROADWAY OR ADJACENT TO THE ROADWAY CAUSING AN INTERFERENCE TO VEHICULAR TRAFFIC REQUIRES PRIOR APPROVAL FROM THE CITY TRAFFIC ENGINEERING DIVISION, AND MUST CONFORM TO THE REQUIREMENTS SET FORTH BY THE UNIFORM MANUAL OF TRAFFIC CONTROL DEVICES OF THE STATE OF LOUISIANA. THE CONTRACTOR MUST FURNISH ALL NECESSARY TRAFFIC SIGNS AND/OR BARRICADES AND MAINTAIN THEM DURING CONSTRUCTION ACTIVITY.

EXISTIN

PROJECT: KBR
STORMWATER RUN-OFF CALCULATIONS

Formulas used:

[1] RATIONAL METHOD: Q=Aci

where:
- Q= Peak discharge of watershed in cubic feet per second (cfs) due to maximum stor assumed.
- A= Area of watershed in acres.
- c= Coefficient of run-off [2].
- i= Intensity of rainfall in inches per hour based on concentration time. [3]

[4] $TC = \frac{\left(L^{0.8}\left(\frac{1000}{s}-9\right)^{0.7}\right)}{(1140s^{0.5})}$

where:
- TC= Time of concentration= time required for rain falling at most remote point to reach discharge point.
- c= Site run-off coefficient based on conditions shown.
- s= Percent slope of overland flow.

PRIOR DEVELOPMENT
25 Year Frequency

Q_1 = Aci					
Watertight Surfaces c(1) =	0.9	8974	sqft =	0.206	Acres
Gravel Surface c(2) =	0.25	0	sqft =	0.000	Acres
Green Space c(3) =	0.15	21258	sqft =	0.488	Acres
Summary c =	0.37	30232	sqft =	0.694	Acres

Duration (D) = Time of concentration (TC)

where	L = 196	run-off length ft	Elev diff =	1
	c = 0.37	run-off coef		
	S = 0.5102	percent slope		
therefore	TC = D = 10.71	minutes		
Expected rainfall intensity	i = 3.64	in/hr		
Q_1 =	0.941 cfs		10% reduction	0.094 cfs

POST DEVELOPMENT
25 Year Frequency

Q_2 = Aci					
Watertight Surfaces c(1) =	0.9	26445	sqft =	0.607	Acres
Gravel Surface c(2) =	0.25	0	sqft =	0.000	Acres
Green Space c(3) =	0.15	3787	sqft =	0.087	Acres
Summary c =	0.81	30232	sqft =	0.694	Acres

Duration (D) = Time of concentration (TC)

where	L = 132	run-off length ft	Elev diff =	1.5
	c = 0.81	run-off coef		
	S = 1.1364	percent slope		
therefore	TC = D = 6.77	minutes		
Expected rainfall intensity	i = 3.64	in/hr		
Q_2 =	2.036 cfs			

DETENTION REQUIREMENTS

Detention required Q_2-Q_1	1.09 cfs			
ONE HOUR DETENTION	3941.8 cuft			
DETENTION DIMENSIONS		WIDTH	53	feet
		LENGTH	132	feet
		DEPTH	0.56	feet

DISCHARGE END AREA REQUIREMENTS
10 Year Frequency

[5] $A = \frac{Q}{(c\sqrt{(2gh)})}$

where:
- A= Discharge Area required
- g= Acceleration of gravity
- c= Discharge coefficient
- h= Hydraulic head
- Q= Flow volume from run-off

Pipe Servicing Site Drainage

Q =	0.094 cfs	h =	2.50	feet
c =	0.62 coefficient	A =	0.012	sqft
g =	32.16 ft/sec/sec			

SITE LEGEND

LEGEND

- PROPERTY LINE
- TG =11.4' / BG =10.9' — TOP OF CURB / BOTTOM OF CURB
- TG 00.0 / INV 00.0 — TOP OF GRATE / INVERT OF PIPE
- x00.00 EXISTING ELEVATIONS
- DRAINAGE FLOW ARROWS

DAMMON ENGINEERING, INC.
Architects & Engineers
www.dammonengineering.com
info@dammonengineering.com
P: 985.643.5532
F: 985.641.5950
Chief Architect: Kevin J. Kinchen, NCARB
Chief Engineer: Brian Mistich, PE
5420 Orleans Trail
Slidell, LA 70458

REVISIONS

#	DESCRIPTION	DATE

SEAL:

PRELIMINARY NOT FOR CONSTRUCTION

OFFICE BUILDOUT FOR KBR ENTERPRISES
716 STRAWBERRY STREET
SLIDELL, LOUISIANA 70460

JOB No: 22221 DATE: 01-07-15
DRAWN BY: CKD/KJK CHECKED BY: CKD

The plans, specifications, and other documents prepared by the Architect for this project are and shall remain the property of Dammon Engineering, and are protected by law. They are not to be changed or copied in any form or manner whatsoever, nor are they to be assigned to any third party without first obtaining the written permission and consent of Dammon Engineering. In the event of unauthorized reuse of these plans by a third party, the third party shall indemnify and hold harmless the Architect for any and all liability, losses, and damages arising out of the third party's reuse of these plans.

SHEET TITLE:
SITE PAVING PLAN & DETAILS

DRAWING NUMBER:
C102

SHEET No: 00 of #