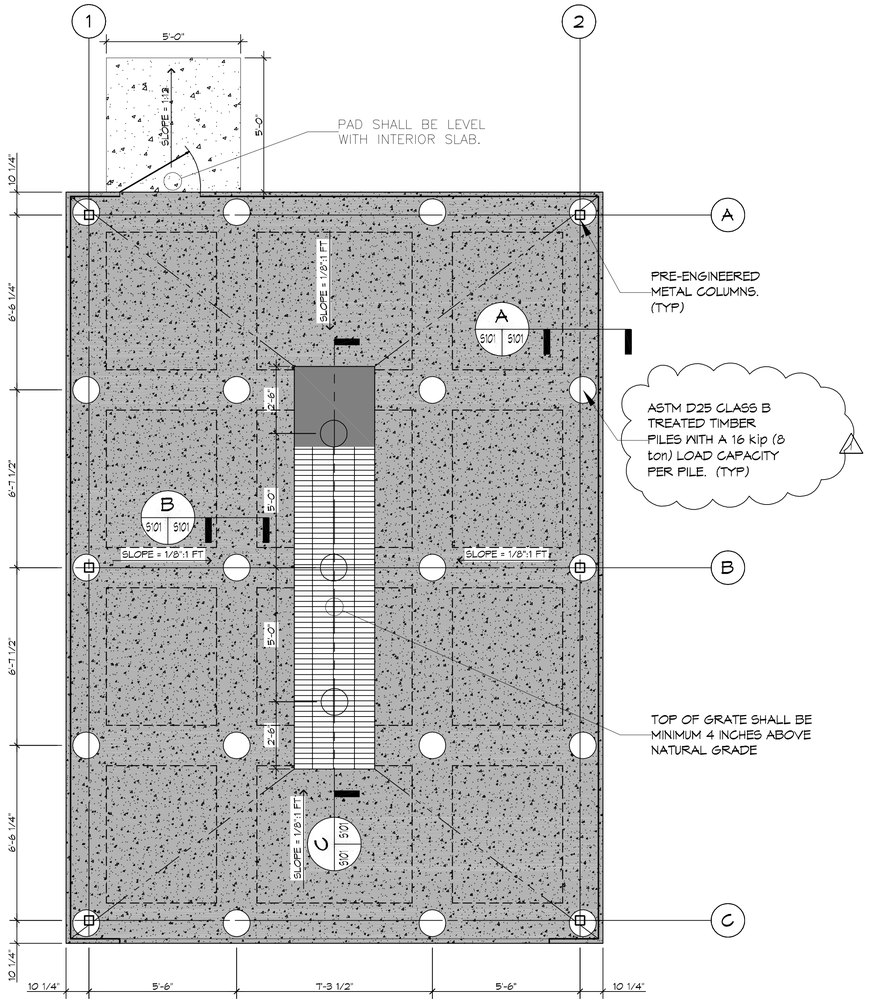


1 FOUNDATION PLAN
SCALE: 3/8" = 1'-0"

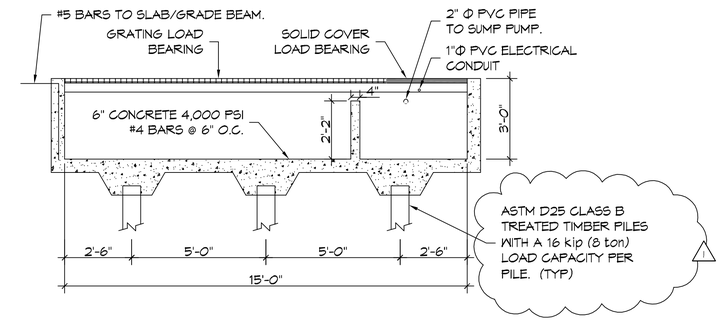


C S101|S101 FOUNDATION SECTION
SCALE: 3/8" = 1'-0" TRENCH DETAIL

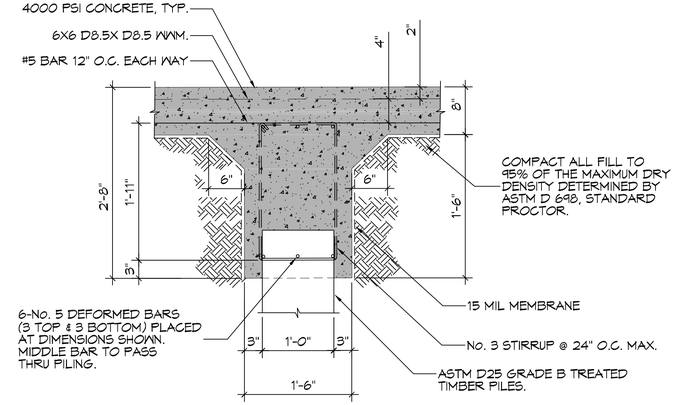


B S101|S101 FOUNDATION SECTION
SCALE: 1" = 1'-0" INTERIOR GRADE BEAM

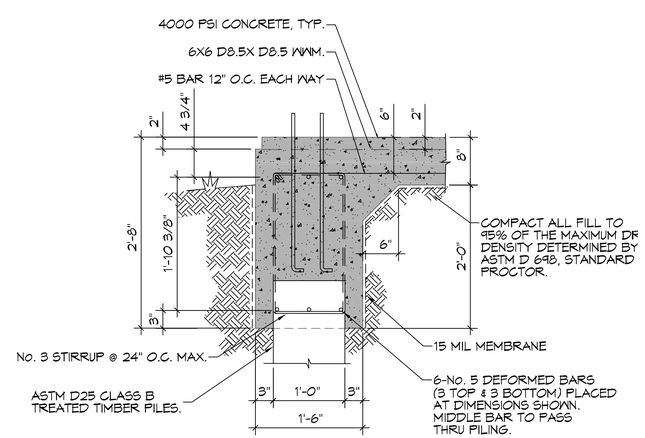


A S101|S101 FOUNDATION SECTION
SCALE: 1" = 1'-0" EXTERIOR LOAD BEARING GRADE BEAM

## PILING NOTES

1. PILES SHALL BE 40' MINIMU LENGTH, CLASS B TREATED TIMBER PILES; PILES SHALL HAVE A 8 INCH TIP AND 12 INCH BUTT.
2. ALL PILES TO BE EMBEDDED 40 FT. MINIMUM INTO NATURAL SOIL TO PROVIDE A LOAD CAPACITY OF 16 kips (8 tons) PER PILE.
3. ~~NO FIELD SUPERVISION OR INSPECTION PROVIDED~~ UNDER THIS SEAL UNLESS OTHERWISE NOTED.
4. PILE LAYOUT MAY BE MODIFIED DUE TO ACTUAL DRIVING CONDITIONS. ENGINEER SHALL BE NOTIFIED OF ANY MODIFICATION.
5. A PILE BLOW COUNT LOG OF ALL PILES SHALL BE SUBMITTED TO THE ENGINEER OF RECORD. FAILURE TO SUBMIT SAID LOG WILL RELEASE THE ENGINEER OF ALL RESPONSIBILITY.
6. CONTRACTOR IS RESPONSIBLE FOR THE COMPARISON & VERIFICATION OF PILE LAYOUT DIMENSIONS WITH MOST RECENT ARCHITECTURAL DRAWINGS, ASSURING THAT PILES DO FALL WITHIN LIMITS OF THE DESIGN.

## GENERAL FOUNDATION NOTES

1. ALL DIMENSIONS ARE EDGE OF CONCRETE (EOC) TO EDGE OF CONCRETE (EOC) UNLESS NOTED OTHERWISE.
2. VERIFY ALL PLUMBING AND ELECTRICAL ROUGH-IN LOCATIONS.
3. CONCRETE MIX SHALL HAVE A MINIMUM COMPRESSIVE STRENGTH OF 4000 PSI AT 28 DAYS. CONCRETE MIX SHALL BE IN ACCORDANCE WITH ACI-318.
4. ALL CONVENTIONAL REINFORCING STEEL SHALL MEET ASTM-A615 (GRADE 60).
5. ONE LAYER OF POLYETHYLENE VAPOR BARRIER SHALL BE PLACED UNDER ALL CONCRETE. VAPOR RETARDER TO BE MINIMUM 10 MIL THICKNESS; ASTM E 1745 CLASS A, PERMEANCE LESS THAN 0.01 PERMS, EQUAL TO STEGO INDUSTRIES STEGO WRAP, ECOSHIELD-E 15 MIL BY EPRO, OR IRONBAR 15 BY FLATIRON FILMS. PROVIDE APPROPRIATE ACCESSORIES FOR A COMPLETE SYSTEM. OVERLAP VAPOR BARRIER EDGES BY 24 INCHES.
6. ALL REINFORCING STEEL AND MESH SHALL BE SECURELY SUPPORTED TO PREVENT BOTH VERTICAL AND HORIZONTAL MOVEMENT DURING CONCRETE PLACEMENT.
7. THE CONTRACTOR SHALL VERIFY ALL DROPS, OFFSETS, BRICK LEDGES, DIMENSIONS AND CONFIGURATIONS. CONTRACTOR MUST BE RESPONSIBLE FOR SAME.
8. GRADE BEAM DIMENSIONS MAY VARY BY -5%, +20%.
9. NEW SPREAD CONCRETE FOOTINGS AND CONTINUOUS FOOTINGS, BEARING ON COMPACTED STRUCTURAL FILL SHALL BE AT LEAST 2 FEET BELOW FINISHED GRADE.


DAMMON ENGINEERING, INC.
554 Old Spanish Trail Slidell, LA 70458 (985) 649-5832
www.dammonengineering.com
info@dammonengineering.com
PH: 985.649.5832
Chief Engineer: Brian Mistich, PE
554 Old Spanish Trail
Slidell, LA 70458


REVISIONS

| # | DESCRIPTION | DATE |
|---|---|---|
| 1 | REVISE PILING DATA | 5/26/2016 |

SEAL:

STATE OF LOUISIANA
BRIAN A. MISTICH
License No. 30187
5/26/2016

WASH RACK
BLUELINE RENTALS
2450 DESTREHAN AVENUE
HARVEY, LOUISIANA 70058

| | | | |
|---|---|---|---|
| JOB No: | 22718 | DATE: | 13 APRIL 2016 |
| DRAWN BY: | DPD | CHECKED BY: | BAM |


This drawing is copyrighted by Dammon Engineering, Inc. Reproduction or modification of this drawing without written consent of Dammon Engineering, Inc. is prohibited. Any such consent shall constitute the property of Dammon Engineering, and project owner shall be used for the purpose of completing the project for which it was prepared. Any other use or reproduction without written consent of Dammon Engineering, Inc. is prohibited. Any reuse for other projects, or alterations to this drawing, without written consent of Dammon Engineering, Inc. is prohibited. Any such consent shall constitute a new contract between the parties.


SHEET TITLE:
STRUCTURAL PLAN

DRAWING NUMBER:
S101

SHEET No: 3 of 6