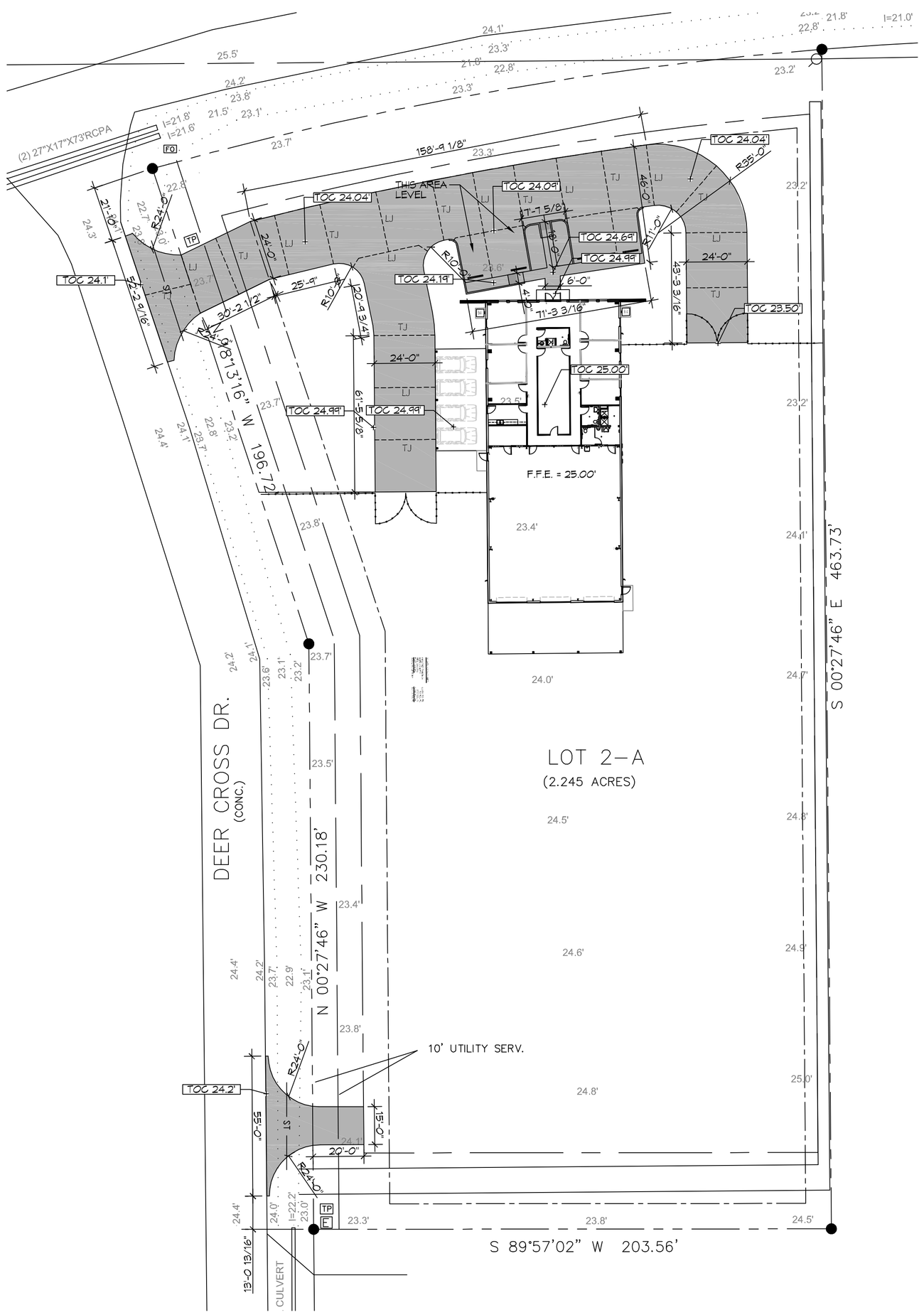

7 SITE PAVING PLAN

SCALE: 1" = 10'-0"

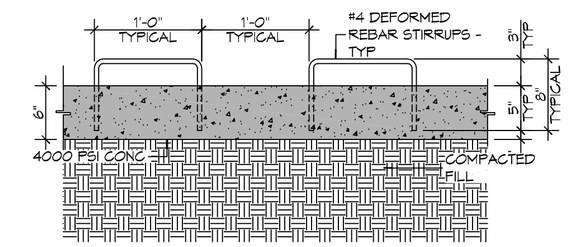

F CURB DOWEL DETAIL

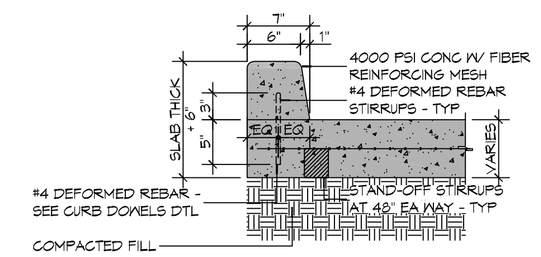

E TYPICAL CURB

6" MTL KEYWAY JOINT SYSTEM NOTE:
LONGITUDINAL JOINTS (LJ) No.5 DEFORMED DOWEL ROD 24" L @ 24" O.C.
TRANSVERSE JOINTS (TJ): No.5 SMOOTH DOWEL ROD 24" L @ 24" O.C.

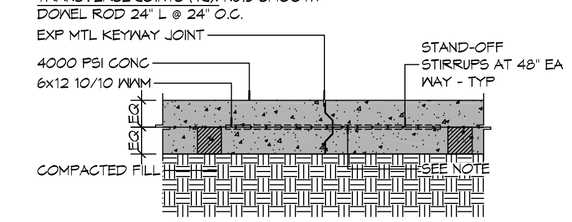

D TYPICAL PAVEMENT JOINT

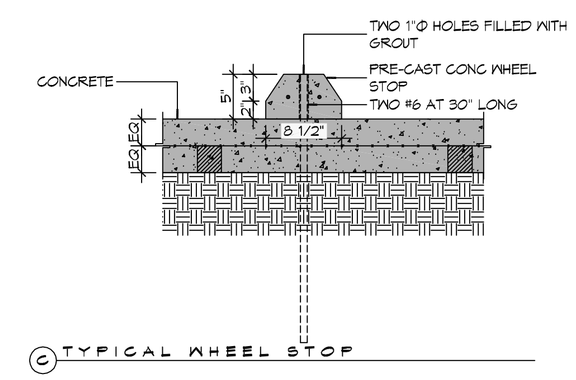

C TYPICAL WHEEL STOP

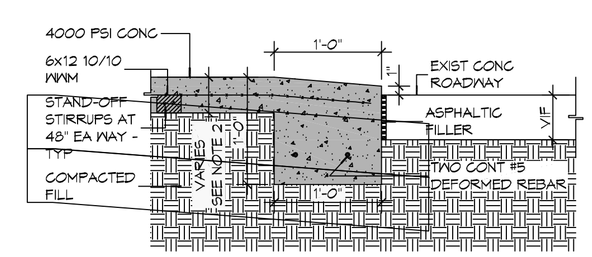

A DRIVEWAY ROLLOVER CURB

8 PAVING DETAILS

SCALE: 1" = 1'-0"

GENERAL PAVING NOTES

1. ALL NEW CONCRETE SHALL SHALL HAVE A MINIMUM COMPRESSIVE STRENGTH OF 4,000 PSI AT 28 DAYS AND A MINIMUM THICKNESS OF 6". CONCRETE MIX SHALL BE IN ACCORDANCE WITH THE LATEST REVISION OF ASTM C-150 TYPE 1.
2. CONCRETE PAVING THICKNESS SHALL VARY AS FOLLOWS:
   a. APRONS & LOADING AREAS = 8" THICKNESS (INDICATED WITH CROSS HATCH WHERE OCCURS)
   b. DRIVE LANES & PARKING AREAS = 6" THICKNESS (STANDARD UNO)
3. ALL REINFORCING STEEL SHALL MEET ASTM-A615 (GRADE 60).
4. ALL REINFORCING STEEL SHALL BE SECURELY SUPPORTED TO PREVENT BOTH VERTICAL AND HORIZONTAL MOVEMENT DURING CONCRETE PLACEMENT. ALL CONTROL AND EXPANSION JOINTS SHALL BE LOCATED AND INSTALLED AS SHOWN ON THE PAVING PLAN AND IN ACCORDANCE WITH THE MANUFACTURER'S RECOMMENDATIONS.
5. ALL SUB GRADE FILL SHALL BE SELECT GRANULAR MATERIAL COMPACTED TO 95% STANDARD PROCTOR DENSITY IN A MAXIMUM OF 6" LIFTS.
6. ANY WORK WITHIN THE ROADWAY OR ADJACENT TO THE ROADWAY CAUSING AN INTERFERENCE TO VEHICULAR TRAFFIC MUST CONFORM TO THE REQUIREMENTS SET FORTH BY THE UNIFORM MANUAL OF TRAFFIC CONTROL DEVICES OF THE STATE OF LOUISIANA. THE CONTRACTOR MUST FURNISH ALL NECESSARY TRAFFIC SIGNS AND/OR BARRICADES AND MAINTAIN THEM DURING CONSTRUCTION ACTIVITY.

PAVING LEGEND

- TOC XXXX — TOP OF CONCRETE ELEVATION
- TOG XXXX / INV XXXX — TOP OF GRATE ELEVATION / INVERT OF PIPE ELEVATION
- LJ — LONGITUDINAL JOINTS (LJ) = NO. 5 DEFORMED DOWEL RODS 24" LONG @ 24" O. C.
- TJ — TRANSVERSE JOINTS (TJ) = NO. 5 SMOOTH DOWEL RODS 24" LONG @ 24" O. C.
- PARKING WHEEL STOP FOR EACH VACUUM BAY, SEE PAVING DETAIL FOR CONSTRUCTION
- NEW CATCH BASIN
- +000.00 — EXISTING TOPO

DAMMON ENGINEERING, INC.
LOUISIANA & MISSISSIPPI
www.dammonengineering.com
info@dammonengineering.com
PH: 985.649.5832
Chief Engineer: Brian Mistich, PE
554 Old Spanish Trail
Slidell, LA 70458

REVISIONS

#	DESCRIPTION	DATE

SEAL: STATE OF LOUISIANA — BRIAN A. MISTICH, License No. 30187, PROFESSIONAL ENGINEER

NEW OFFICE WAREHOUSE
ZEIGLER TREE & TIMBER, CO.
LA. HWY 1085 DEER CROSS DRIVE
MADISONVILLE, LA 70447

JOB No:	2383
DATE:	7-25-2018
DRAWN BY:	CAD
CHECKED BY:	BAM

This drawing and specifications, designs and arrangements represent the property of Dammon Engineering, Inc. and shall not be reproduced in whole or in part without written permission of Dammon Engineering, Inc. Any reproduction or distribution of these plans or specifications, or reliance on or performance under any work or projects other than those specifically intended by Dammon Engineering, Inc. is prohibited and is at the sole risk of the user. Dammon Engineering, Inc. is not responsible for any modifications made to these plans without the written consent of Dammon Engineering, Inc. © 2018 Dammon Engineering, Inc.

SHEET TITLE: SITE PAVING PLAN

DRAWING NUMBER: C101

SHEET No: 2 of 8