City of Slidell Engineering Department
Freddy Drennan- Mayor
1330 Bayou Lane, Suite 112
(985) 646-4270
Donna O'Dell, Ph.D., P.E., City Engineer
P.O. Box 828
Slidell, LA 70459
FAX (985) 646-6124

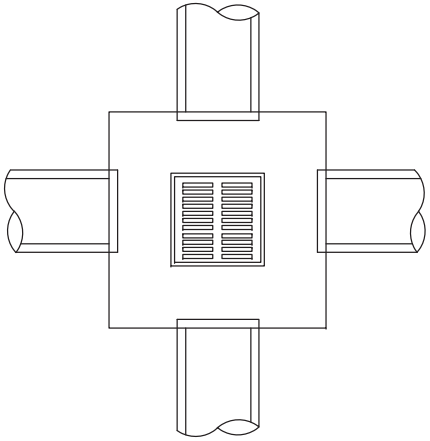

TYPICAL DROP INLET

NTS

NOTE: NUMBER OF CULVERTS INTO/OUT OF BOX WILL VARY.

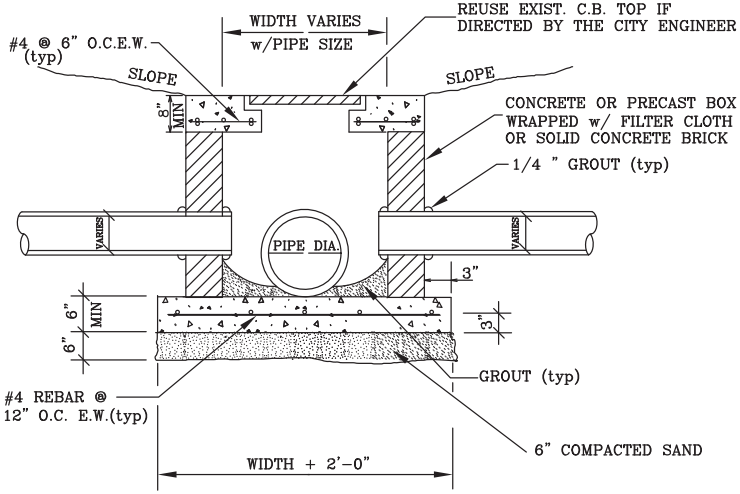

SECTION DROP INLET

NTS

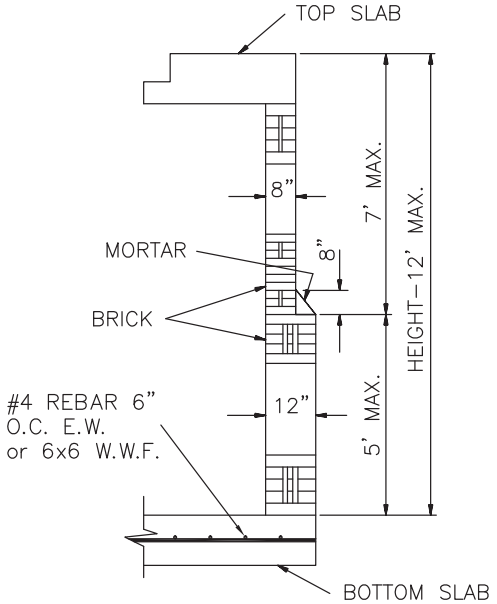

TYPICAL WALL SECTION FOR BRICK CONST.

N.T.S.

NOTES:

1. CATCH BASIN SHALL BE PRECAST, CAST-IN-PLACE, OR SOLID BRICK CONSTRUCTION, AS SHOWN IN DETAIL.
2. CONCRETE STRENGTH TO BE 3,000 PSI (MIN)
3. WHEN BOX IS 7'-0" OR LESS IN HEIGHT, WALLS ARE TO BE 8" THICK. WHEN BOX'S HEIGHT IS GREATER THAN 7'-0" BUT LESS THAN 12'-0" SEE WALL SECTION.
4. ALL MASONRY TO BE LAID WITH RUNNING BOND AND HEADER COURSE (EVERY FOURTH LAYER).
5. ALL WALLS TO BE PLASTERED 1/2" THICK INSIDE AND OUTSIDE.
6. 12" THICK CRUSHED STONE BEDDING FOUNDATION SHALL BE REQUIRED UNDER ALL MANHOLES AND CATCH BASINS. (NOT SHOWN ON PLANS)
7. CAST-IN-PLACE CATCH BASINS SHALL COMPLY WITH DOTD STANDARD PLANS AND SPECIFICATIONS.

EFFORT EXCELLENCE SLIDELL LOUISIANA	DROP INLET		
	CITY OF SLIDELL ENGINEERING DEPT.		
	Annual Maintenance Contract FY' 2019		
	DRAWN BY: JMC	FILE No: 950-41F	SHT 10
	Approved By: DSO	DATE: 2/8/2018	