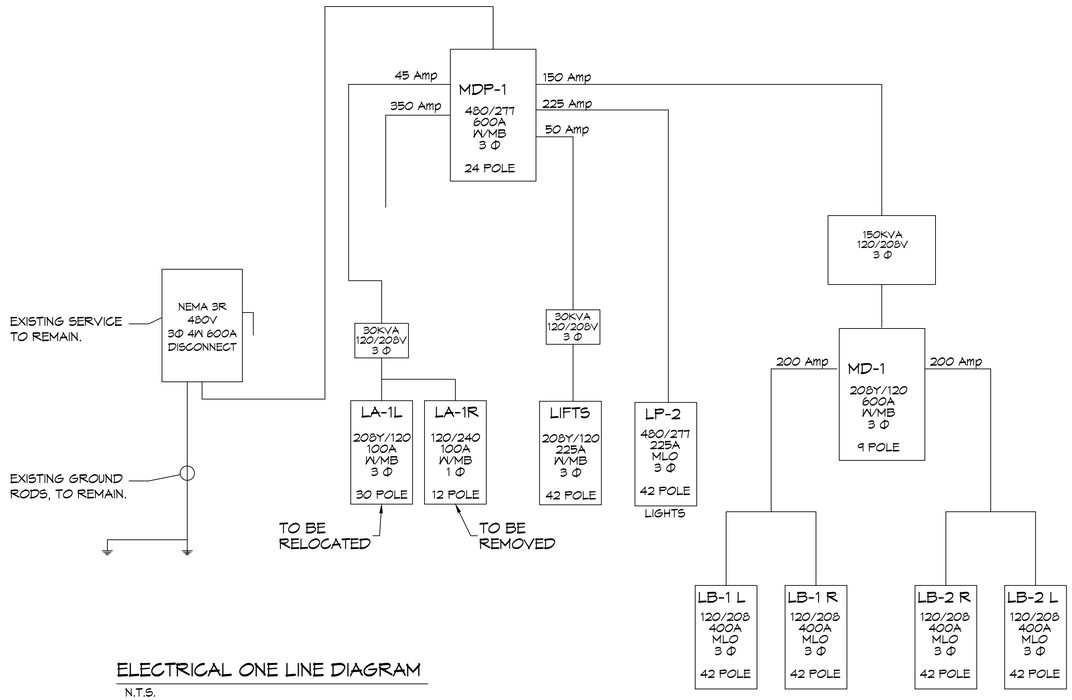

ELECTRICAL ONE LINE DIAGRAM

N.T.S.

PANEL SCHEDULE

PANEL: LA-1L
LOCATION: ELECTRICAL CLOSET 2nd FLOOR
FEEDER SOURCE: MDP

VOLTAGE: 120/208V 3Φ 100 amp
ENCLOSURE: SURFACE MOUNTED W/ EQUIPMENT GND BAR SQ D TYPE QO LOAD CENTER

CKT NO	THHN WIRE SIZE	LOAD DESCRIPTION LOCATION	BREAKER AMP	BREAKER POLE	LOAD (kva)	AΦ BΦ CΦ	LOAD (kva)	BREAKER POLE	BREAKER AMP	LOAD DESCRIPTION LOCATION	THHN WIRE SIZE	CKT NO
1	#12	ADMIN OUTLETS	20	1	1.3		1.1	1	20	ADMIN OUTLETS	#12	2
3	#12	ADMIN OUTLETS	20	1	0.5		1.1	1	20	ADMIN OUTLETS	#12	4
5	#12	CUSTOMER REP OUTLETS	20	1	0.5		0.5	1	20	CUSTOMER REP OUTLETS	#12	6
7	#12	CUSTOMER REP OUTLETS	20	1	0.5		1.1	1	20	1st FLR OFFICE OUTLETS	#12	8
9	#12	1st FLR RESTROOMS OUTLETS	20	1	1.1		1.9	1	20	AHU - 2	#12	10
11	#12	SLIDING DOOR OPERATOR	20	1	1.1		0.7	1	20	RESTROOM & CSR LIGHTS	12	12
13	12	EXTERIOR SIGNS & LIGHTS	20	1	1.7		0.5	1	20	CUSTOMER LOUNGE AND MANAGEMENT LIGHTS	12	14
15	12	ADMIN, IT CLOSET	20	1	0.5		0.4	1	20	LIGHTS	12	16
17	12	LIGHTS CSR & SERVICE AREA	20	1	0.5		0.4	1	20	2ND FLR ADMIN LIGHTS	12	18
19 21	12	AHU-4	15	2	0.3 0.3		1.5 1.5	2	20	CU-4; 1.5 TON	10	20 22
23 25	12	AHU-3	15	2	0.3 0.3		1.5 1.5	2	20	CU-3; 1.5 TON	10	24 26
27	-	SPARE	20	1	-		2.7	1	45	CU-2; 4 TON	6	28
29	-	SPARE	20	1	-		2.7					30

SOLID NEUTRAL
NEUTRAL WIRE (N)

TOTAL CONNECTED LOAD (VA) = ####

AΦ = #### BΦ = #### BΦ = ####

GROUND BUS
GROUND WIRE (G)

NOTE: THIS PANEL IS CURRENTLY LOCATED ON THE 1ST FLOOR IN THE ADMINISTRATIVE ELECTRICAL CLOSET. IT IS TO BE RELOCATED TO THE 2ND FLOOR ELECTRICAL CLOSET.

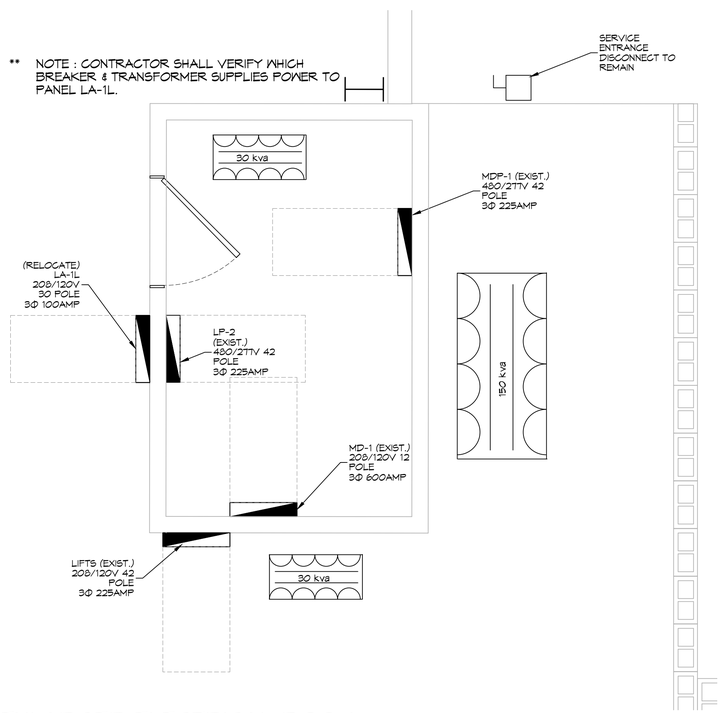

3 ENLARGED ELECTRICAL ROOM

SCALE: 1/2"=1'-0"

DAMMON ENGINEERING, INC.
LOUISIANA & MISSISSIPPI
www.dammonengineering.com
info@dammonengineering.com
PH: 985.649.5931
Chief Engineer: Brian Mistich, PE
554 Old Spanish Trail
Slidell, LA 70458

REVISIONS

#	DESCRIPTION	DATE

SEAL:

STATE OF LOUISIANA
BRIAN A. MISTICH
License No. 30187
PROFESSIONAL ENGINEER

NEW SERVICE AREA

LEGACY BUICK GMC SLIDELL

298 E HONZE BEACH RD.
SLIDELL, LA 70458

JOB No:	2471
DATE:	12-12-2023
DRAWN BY:	CKD
CHECKED BY:	BAM

THIS DRAWING AND ANY IDEAS, DESIGNS, ARRANGEMENTS, AND REPRESENTATIONS INDICATED OR REPRESENTED HEREIN ARE THE PROPERTY OF DAMMON ENGINEERING, INC. AND WERE PREPARED FOR USE ON THE PROJECT NAMED. NO OTHER USE, INCLUDING BUT NOT LIMITED TO REPRODUCTION OR ASSIGNMENT TO THIRD PARTIES, IS PERMITTED WITHOUT THE WRITTEN CONSENT OF DAMMON ENGINEERING, INC. AND WITHOUT COMPENSATION TO DAMMON ENGINEERING, INC. ALL REPRODUCTIONS OR COPIES MADE OF ANY OF THE FOREGOING MUST CONTAIN THIS NOTICE.

SHEET TITLE:
POWER PANEL & ONE LINE DIAGRAM

DRAWING NUMBER:

E103

SHEET No: 18 of 18