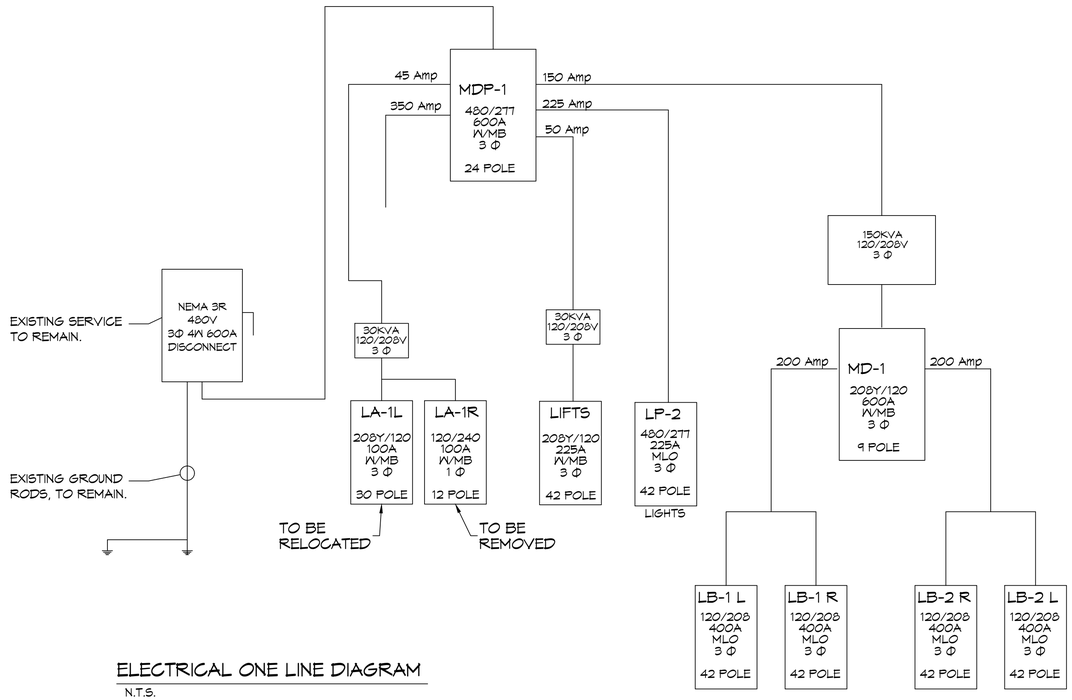

ELECTRICAL ONE LINE DIAGRAM

N.T.S.

PANEL SCHEDULE

PANEL: LA-1L
LOCATION: ELECTRICAL CLOSET 2nd FLOOR
FEEDER SOURCE: MDP

VOLTAGE: 120/208V 3Φ 100 amp
ENCLOSURE: SURFACE MOUNTED W/ EQUIPMENT GND BAR SQ D TYPE QO LOAD CENTER

CKT NO	THHN WIRE SIZE	LOAD DESCRIPTION LOCATION	BREAKER AMP	BREAKER POLE	LOAD (kva)	AΦ BΦ CΦ	LOAD (kva)	BREAKER POLE	BREAKER AMP	LOAD DESCRIPTION LOCATION	THHN WIRE SIZE	CKT NO
1	#12	ADMIN OUTLETS	20	1	1.3		1.1	1	20	ADMIN OUTLETS	#12	2
3	#12	ADMIN OUTLETS	20	1	0.5		1.1	1	20	ADMIN OUTLETS	#12	4
5	#12	CUSTOMER REP OUTLETS	20	1	0.5		0.5	1	20	CUSTOMER REP OUTLETS	#12	6
7	#12	CUSTOMER REP OUTLETS	20	1	0.5		1.1	1	20	1st FLR OFFICE OUTLETS	#12	8
9	#12	1st FLR RESTROOMS OUTLETS	20	1	1.1		1.9	1	20	AHU - 2	#12	10
11	#12	SLIDING DOOR OPERATOR	20	1	1.1		0.7	1	20	RESTROOM & CSR LIGHTS	12	12
13	12	EXTERIOR SIGNS & LIGHTS	20	1	1.7		0.5	1	20	CUSTOMER LOUNGE AND MANAGEMENT LIGHTS	12	14
15	12	ADMIN, IT CLOSET	20	1	0.5		0.4	1	20	LIGHTS	12	16
17	12	LIGHTS CSR & SERVICE AREA	20	1	0.5		0.4	1	20	2ND FLR ADMIN LIGHTS	12	18
19 21	12	AHU-4	15	2	0.3 0.3		1.5 1.5	2	20	CU-4; 1.5 TON	10	20 22
23 25	12	AHU-3	15	2	0.3 0.3		1.5 1.5	2	20	CU-3; 1.5 TON	10	24 26
27	-	SPARE	20	1	-		2.7	1	45	CU-2; 4 TON	6	28
29	-	SPARE	20	1	-		2.7					30

SOLID NEUTRAL
NEUTRAL WIRE (N)

TOTAL CONNECTED LOAD (VA) = ####

AΦ = #### BΦ = #### CΦ = ####

GROUND BUS
GROUND WIRE (G)

NOTE: THIS PANEL IS CURRENTLY LOCATED ON THE 1ST FLOOR IN THE ADMINISTRATIVE ELECTRICAL CLOSET. IT IS TO BE RELOCATED TO THE 2ND FLOOR ELECTRICAL CLOSET.

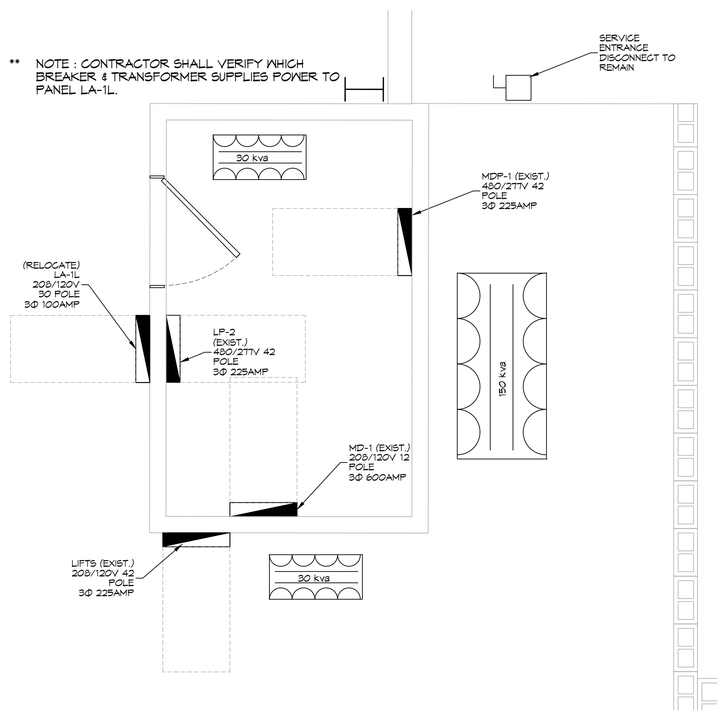

3 ENLARGED ELECTRICAL ROOM

SCALE: 1/2"=1'-0"

DAMMON ENGINEERING, INC.
LOUISIANA & MISSISSIPPI
www.dammonengineering.com
info@dammonengineering.com
PH: 985.649.5821

Chief Engineer: Brian Mistich, PE
554 Old Spanish Trail
Slidell, LA 70458

REVISIONS

#	DESCRIPTION	DATE

SEAL:

STATE OF LOUISIANA
BRIAN A. MISTICH
License No. 30187
PROFESSIONAL ENGINEER

NEW SERVICE AREA

LEGACY BUICK GMC SLIDELL

293 E HONZE BEACH RD.
SLIDELL, LA 70458

JOB No:	24171
DATE:	02-15-2024
DRAWN BY:	CKD
CHECKED BY:	BAM

THIS PLAN, DESIGN, SPECIFICATION, DRAWING AND ARRANGEMENT IS THE PROPERTY OF DAMMON ENGINEERING, INC. AND MUST BE RETURNED ON REQUEST. REPRODUCTION OF THIS PLAN IN WHOLE OR IN PART IS FORBIDDEN WITHOUT THE WRITTEN CONSENT OF DAMMON ENGINEERING, INC. ANY PROJECT NOT EXECUTED WITHIN 90 DAYS FROM THE DATE SHOWN HEREON IS TO BE CONSIDERED TERMINATED AND ALL PLANS RETURNED TO DAMMON ENGINEERING, INC. ANY REVISIONS TO THE PLAN SHALL BE MADE BY AND WITHOUT PERMISSION OF DAMMON ENGINEERING, INC. ANY REUSE OF THE PLAN FOR OTHER PROJECTS OR OTHER PURPOSES IS PROHIBITED WITHOUT THE WRITTEN CONSENT OF DAMMON ENGINEERING, INC.

SHEET TITLE:
POWER PANEL & ONE LINE DIAGRAM

DRAWING NUMBER:

E103

SHEET No: 18 of 18