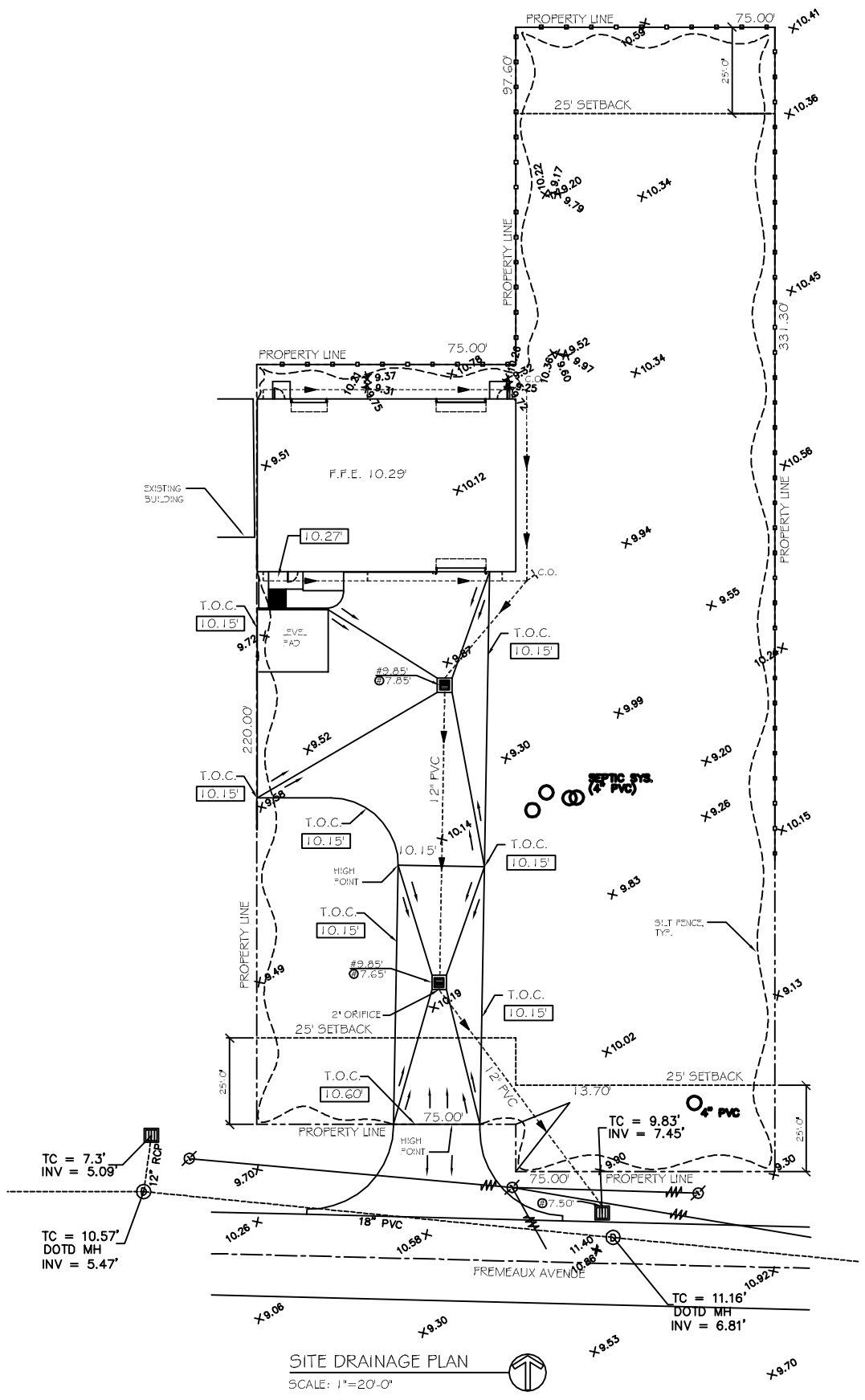

SITE DRAINAGE PLAN

SCALE: 1"=20'-0"

LEGEND

- PROPERTY LINE
- SETBACK LINE
- W — NEW WATER LINE
- S — NEW SEWER LINE
- E — NEW POWER LINE
- TEMPORARY SILT FENCING
- NEW DRAIN LINE
- 6' OPAQUE FENCE
- NEW DROP INLET w/TEMP. SILT FENCING
- SLOPE LINES
- # — T.O. GRATE ELEVATION
- (#) — INVERT ELEVATION
- 00.00 — NEW ELEVATIONS
- x00.00' — EXISTING ELEVATIONS

GUTTERS AND DOWN SPOUTS TO BE SEAMLESS ALUMINUM 24 GAUGE, COLOR TO BE SELECTED BY OWNER. GUTTERS TO BE "OGEE" IN CROSS SECTION, MINIMUM 6" WIDTH.

NOTES:

1) DRAIN PIPE & FITTINGS WITHIN PROPERTY LINE SHALL BE POLYVINYL CHLORIDE PLASTIC PIPE, MEETING CLASS 100 C-900 PVC.
2) ELEVATIONS SHOWN ARE M.S.L.
3) FIELD VERIFY ALL ELEVATIONS AND DRAINAGE SYSTEM PLACEMENT PRIOR TO START OF WORK.
4) MUCK OUT 24" DEEP FOR FOUNDATION PAD MINIMUM, OR TO UNDISTURBED SOIL CAPABLE OF 1500 PSF BEARING.
5) DOWN SPOUTS SHALL FLOW INTO SUB-SURFACE DRAINAGE.
6) THERE IS NO EVIDENCE OF EXISTING OFF-SITE FLOW CROSSING THE PROPERTY. NEW DRAINAGE CALCULATIONS ARE DETERMINED ACCORDINGLY.

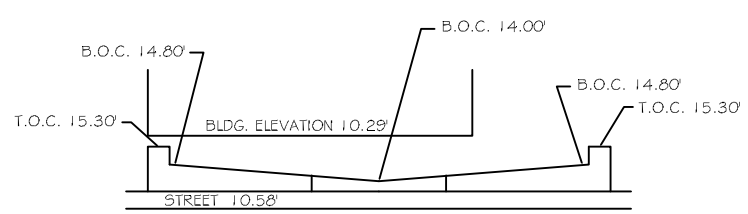

SECTION

N.T.S.

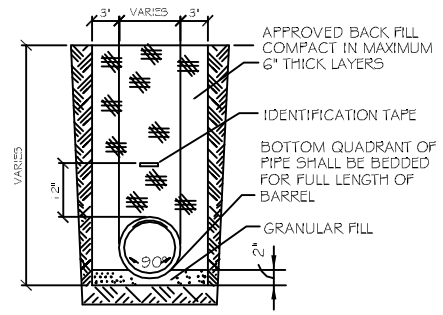

DRAIN PIPE BEDDING

N.T.S.

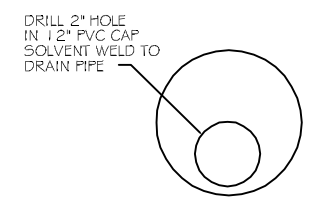

ORIFICE DETAIL

N.T.S.

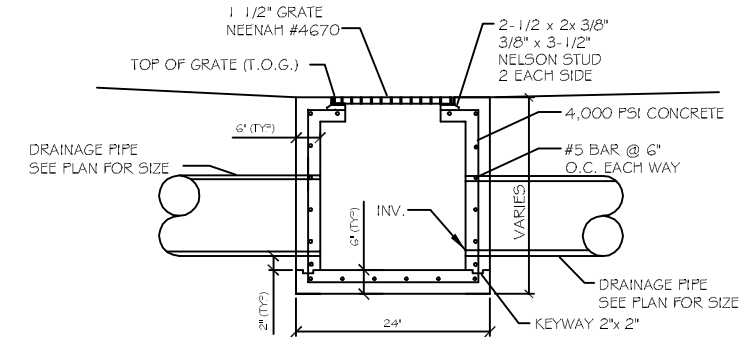

TYPICAL DROP INLET

N.T.S.

PROJECT: BULK SYSTEMS

STORMWATER RUN-OFF CALCULATIONS

Formulas used:

[1] RATIONAL METHOD: Q=Aci

where:
- Q= Peak discharge of watershed in cubic feet per second (cfs) due to maximum storm assumed.
- A= Area of watershed in acres.
- c= Coefficient of run-off [2].
- i= Intensity of rainfall in inches per hour based on concentration time. [3]

[4] TC=

where:
- TC= Time of concentration= time required for rain falling at most remote point to reach discharge point.
- c= Site run-off coefficient based on conditions shown.
- s= Percent slope of overland flow.

PRIOR DEVELOPMENT

25 Year Frequency

Q = Aci

Waterlight Surfaces		4144	sqft =	0.095	Acres
c(1) =	0.9				
Gravel Surface		0	sqft =	0.000	Acres
c(2) =	0.25				
Green Space		37188	sqft =	0.854	Acres
c(3) =	0.15				
Summary		41332	sqft =	0.949	Acres
c =	0.23				

Duration (D) = Time of concentration (TC)

where	L = 208	run-off length ft	Elev diff =1
	c = 0.23	run-off coef	
	S = 0.4808	percent slope	
therefore	TC = D =15.53	minutes	
Expected rainfall Intensity	I = 3.64	in/hr	

Q = **0.778 cfs** 10% reduction **0.078 cfs**

POST DEVELOPMENT

25 Year Frequency

Q = Aci

Waterlight Surfaces		11517	sqft =	0.264	Acres
c(1) =	0.9				
Gravel Surface		0	sqft =	0.000	Acres
c(2) =	0.25				
Green Space		29815	sqft =	0.684	Acres
c(3) =	0.15				
Summary		41332	sqft =	0.949	Acres
c =	0.36				

Duration (D) = Time of concentration (TC)

where	L = 170	run-off length ft	Elev diff =1.5
	c = 0.36	run-off coef	
	S = 0.8824	percent slope	
therefore	TC = D =2.90	minutes	
Expected rainfall Intensity	I = 3.64	in/hr	

Q = **1.240 cfs**

DETENTION REQUIREMENTS

Detention required: Q -Q 0.46cfs

ONE HOUR DETENTION 1663.5cu/ft

DETENTION DIMENSIONS
- WIDTH 65feet
- LENGTH 90feet
- DEPTH **0.28 feet**

DISCHARGE END AREA REQUIREMENTS

10 Year Frequency

where:
- A= Discharge Area required
- g= Acceleration of gravity
- c= Discharge coefficient
- h= Hydraulic head
- Q= Flow volume from run-off

Pipe Servicing Site Drainage

Q =	0.078 cfs	h =	2.50 feet
c =	0.62 coefficient	A =	0.010 sqft
g =	32.16ft/sec/sec		

REQUIRED CONDUIT = 1.35inch inside diameter

References:

1. Chen, W.F. The Civil Engineering Handbook. 1995. Eq.# 31.1 pg.1096
2. Seelye, Elwyn E. Data Book for Civil Engineers, Vol.1 1960. Tbl. B, pg. 18402
3. Seelye, Elwyn E. Data Book for Civil Engineers, Vol.1 1960. Fig.B, pg. 18401
4. Chen, W.F. The Civil Engineering Handbook. 1995. Tbl. 31.2 Regan Equation (=0.013)
5. Chen, W.F. The Civil Engineering Handbook. 1995. Eq.# 28.32, pg. 969

DAMMON ENGINEERING INC
Architects & Engineers
dammoneng@bellsouth.net
Office: 985-641-8882
Fax: 985-641-8950

CHIEF ENGINEER: EMMETT DAMMON, P.E.
CHIEF ARCHITECT: KEVIN VOCHEN
141 CHAUVIN STREET
SLIDELL, LA 70458

BULK SYSTEMS NEW OFFICE/WAREHOUSE BUILDING

1223 FREMEAUX AVENUE
SLIDELL, LOUISIANA 70458

JOB No: 2173 | DATE: 04-22-2013

DRAWN BY: JTL | CHECKED BY:

#	DESCRIPTION	DATE

SITE DRAINAGE PLAN

SHEET No: 5 OF 20

C4