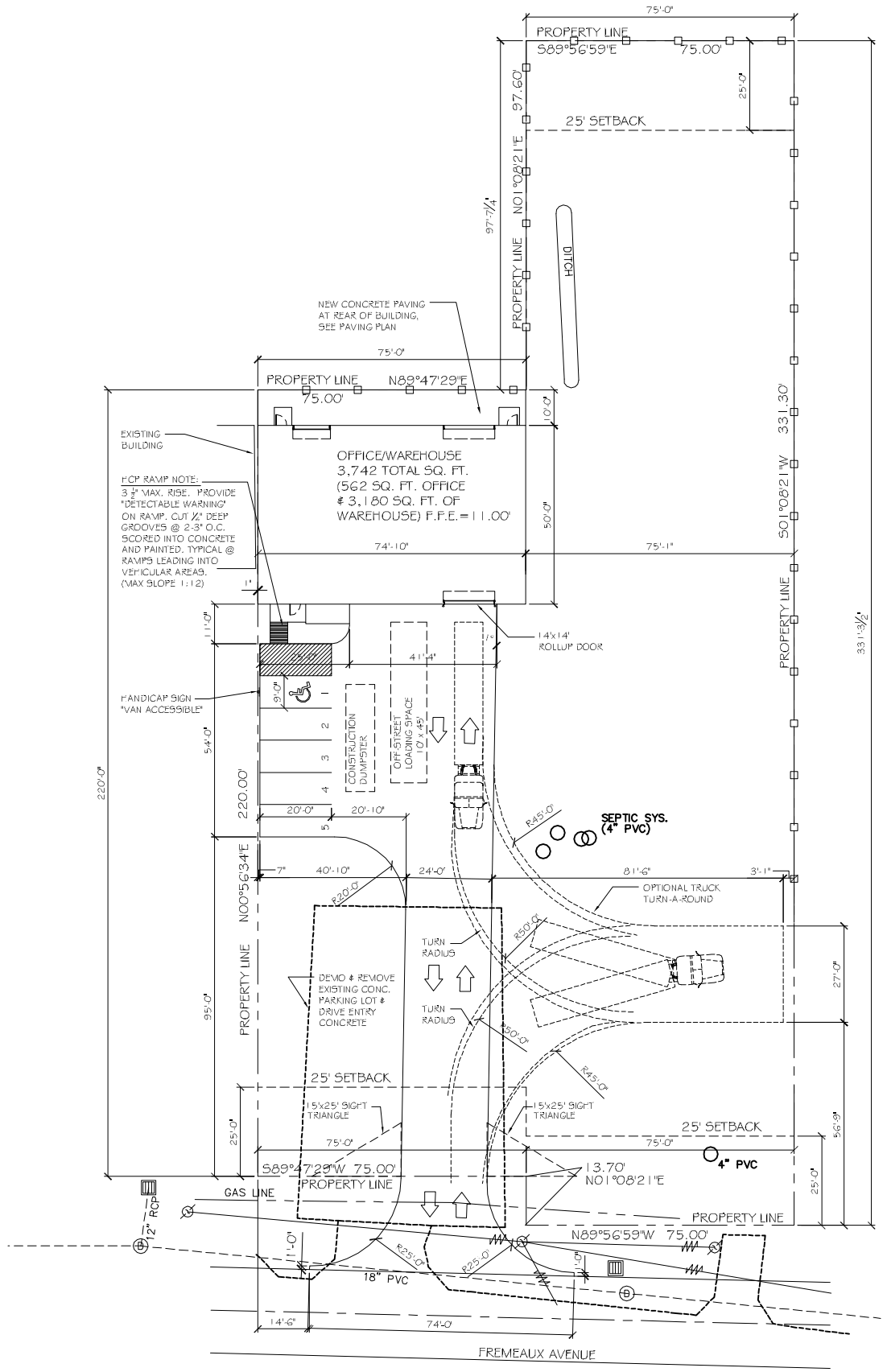

SITE PLAN

SCALE: 1"=20'-0"

LEGEND

- PROPERTY LINE
- SETBACK LINE
- NEW BUILDING
- PARKING
- 6' OPAQUE FENCE
- HANDICAP PARKING
- HANDICAP PARKING SIGN

OFFICE WAREHOUSE PARKING REQUIREMENTS

OFFICE - 1 PER TWO HUNDRED SQUARE FT. = 3
WAREHOUSE - 1 PER 5 EMPLOYEES = 1
TOTAL PARKING REQUIRED = 4 SPACES INCLUDING
1 HANDICAP ACCESSIBLE. TOTAL PROVIDED = 5

NOTE:
ALL CONCRETE PAVEMENT SHALL BE 5" THICK CONCRETE EXCEPT FROM PROPERTY LINE TO STREET SHALL BE 6" THICK CONCRETE.

SITE PLAN NOTES

1. ROOFING MATERIAL: METAL ROOFING PANEL
2. SIDING MATERIAL: METAL PANELS & CMU
3. UTILITIES: ALL UTILITIES SHALL BE PLACED UNDERGROUND

NOTE:
SIGNAGE SHALL COMPLY WITH SIGNAGE GUIDELINES

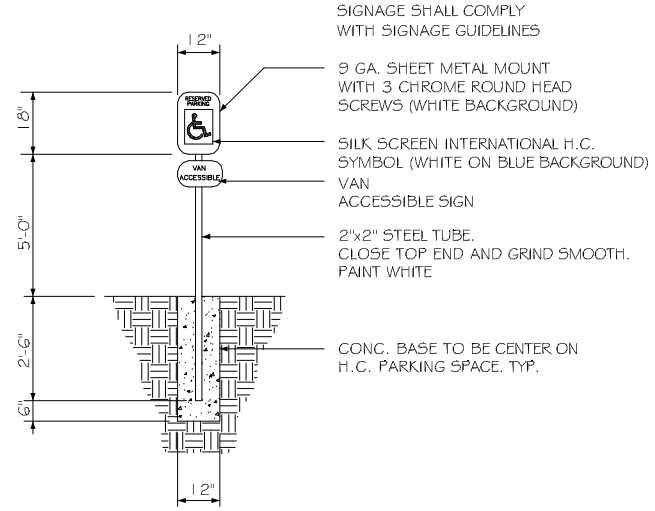

HANDICAP PARKING SIGN

N. T. S.

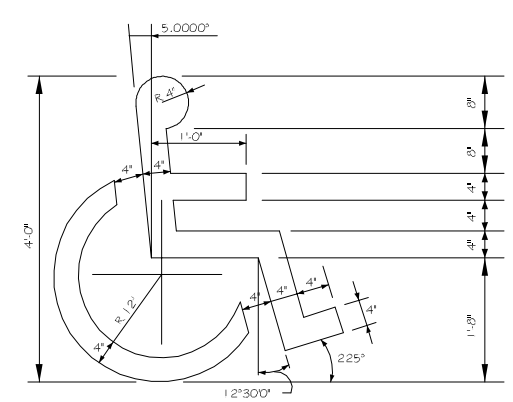

HANDICAP SYMBOL DETAIL

N. T. S.

SITE LIGHTING

EXTERIOR LIGHTING SHALL BE SHADED OR INWARDLY DIRECTED IN SUCH A MANNER SO THAT NO DIRECT LIGHTING OR GLARE BE CAST BEYOND THE PROPERTY LINE. THE INTENSITY OF SUCH LIGHTING SHALL NOT EXCEED ONE FOOT CANDLE AS MEASURED AT THE ABUTTING PROPERTY LINE. (N/A FOR THIS PARTICULAR JOB)

DAMMON ENGINEERING, INC.
Architects & Engineers

CHIEF ENGINEER: EMMETT DAMMON, P.E.
CHIEF ARCHITECT: DAVIN KINCHEN
5544 OLD SPANISH TRAIL
SLIDELL, LA 70458

dammoneng@aol.com
dammonarch@aol.com
PHONE: 985-649-5032
FAX: 985-641-5950

BULK SYSTEMS NEW OFFICE/WAREHOUSE BUILDING

122 G FREMEAUX AVENUE
SLIDELL, LOUISIANA 70458

JOB No: 2173	DATE: 04-22-2013
DRAWN BY: JTL	CHECKED BY:

REVISIONS

#	DESCRIPTION	DATE

SITE PLAN

SHEET No: 3 OF 20

C2