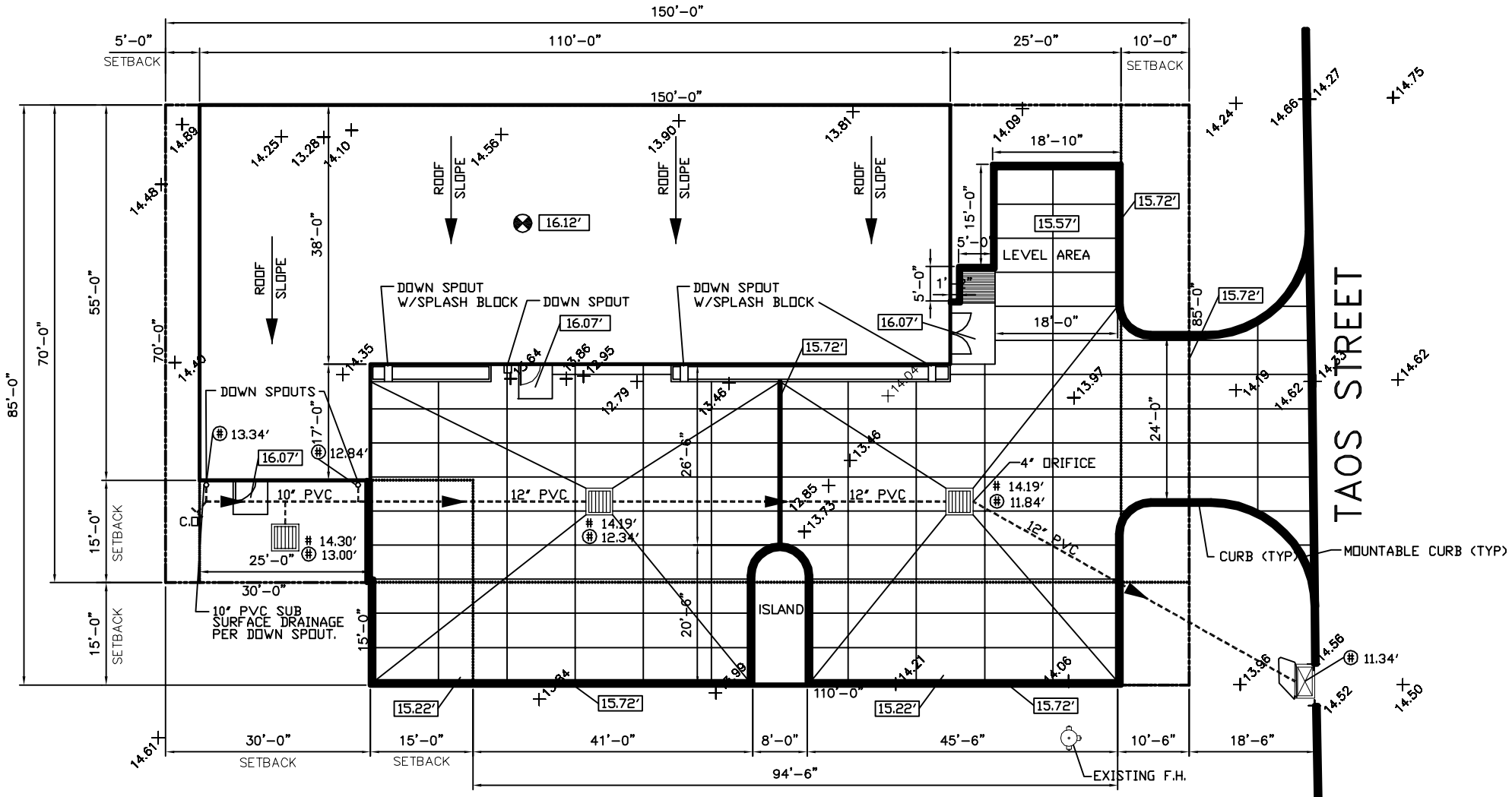

PAVING & DRAINAGE PLAN

SCALE: 1:10

PROJECT:	Feast Catering
DRAINAGE RUN OFF CALCULATIONS -- RATIONAL METHOD	

PRIOR DEVELOPMENT
10 Year Frequency

Q_1 = CIA

Watertight Surfaces		0	sqft =	0.000	Acres
c(1) =	0.9				
Gravel Surface		0	sqft =	0.000	Acres
c(2) =	0.14				
Green Space		12300	sqft =	0.282	Acres
c(3) =	0.21				
Summary		12300	sqft =	0.282	Acres
c =	0.21				

Duration (D) = Time of concentration (TC)
TC = .7039 (L^.3917)(c^-1.1309)(S^-.1985)

where	L =	160	Runoff length ft	Elev diff =	2
	c =	0.21	Runoff coef		
	S =	1.3333	Percent Slope		
therefore	TC = D =	27.66	minutes or		
and from Rainfall Intensity T	I =	4.50	in/hr		
Q_1 =	0.267	cfs	RUNOFF LIMIT 90%	0.240	cfs

POST DEVELOPMENT
10 Year Frequency

Q_2 = CIA

Watertight Surfaces		10405	sqft =	0.239	Acres
c(1) =	0.9				
Gravel Surface		0	sqft =	0.000	Acres
c(2) =	0.14				
Green Space		1895	sqft =	0.044	
c(3) =	0.21				
Summary		12300	sqft =	0.282	Acres
c =	0.79				

D = Time of concentration (TC)
TC = .7039 (L^.3917)(c^-1.1309)(S^-.1985)

where	L =	109	Runoff length ft	Elev diff =	0.5
	c =	0.79	Runoff coef		
	S =	0.4587	Percent Slope		
therefore	TC = D =	6.71	minutes or		
and from Rainfall Intensity T	I =	7.60	in/hr		
Q_2 =	1.703	cfs			

RESULTS

DETENTION REQUIRED	Q_2-Q_1	1.463	cfs	
ONE HOUR DETENTION		5267.2	cuft	
DETENTION DIMENSIONS		WIDTH	47	feet
		LENGTH	109	feet
		DEPTH	1.03	feet

DISCHARGE END AREA CALCULATIONS

Q = cA(2gH)^1/2 where Q is allowable run off

Allowable run off	Q =	0.240	cfs
Friction loss factor	c =	0.98	coefficient
Acceleration	g =	32.2	ft/ft/sec
Height above invert	if H =	2.00	feet
End area	A =	0.02	sqft
REQUIRED CONDUIT =		1.99	inch diameter
	USE	4	inch orifice

LEGEND

- PROPERTY LINE
- SETBACK LINE
- NEW BUILDING
- PARKING
- NEW DROP INLET
- NEW DRAIN LINE
- # 00.00' – TOP OF GRATE ELEVATION
- (#) 00.00' – INVERT ELEVATION
- [00.00'] – NEW ELEVATIONS

NOTES:

1) DRAIN PIPE & FITTINGS SHALL BE POLYVINYL CHLORIDE PLASTIC PIPE, MEETING CLASS 100 C-900 PVC.
2) ELEVATIONS SHOWN ARE M.S.L.
3) ALL ELEVATIONS OF CONCRETE SHALL BE VERIFIED PRIOR TO START OF WORK.

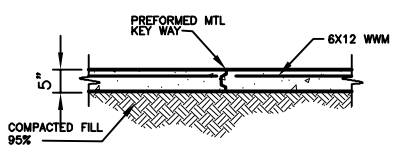

CONSTRUCTION JOINT
N.T.S.

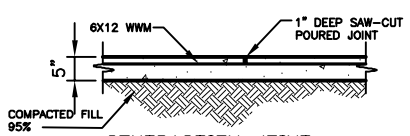

CONTRACTION JOINT
N.T.S.

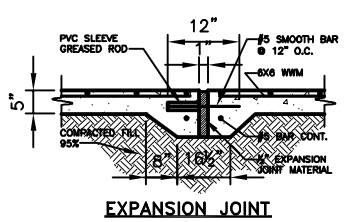

EXPANSION JOINT
N.T.S.

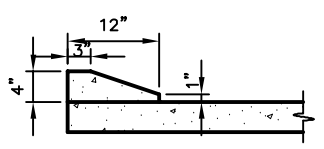

MOUNTABLE CURB DETAIL
N.T.S.

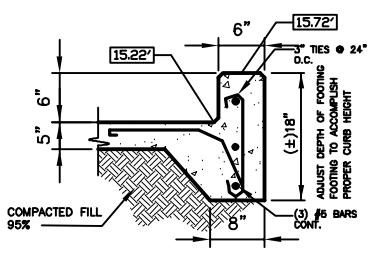

CURB DETAIL
N.T.S.

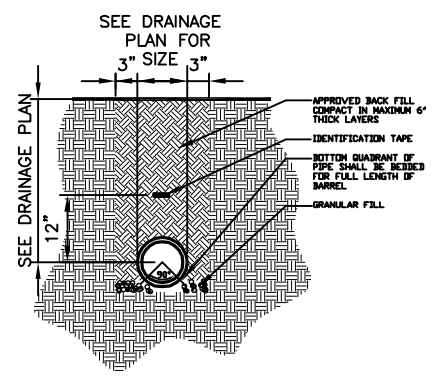

DRAIN PIPE BEDDING
N.T.S.

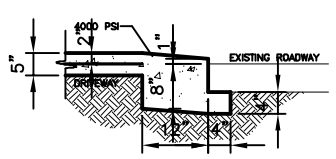

DRIVEWAY SECTION
N.T.S.

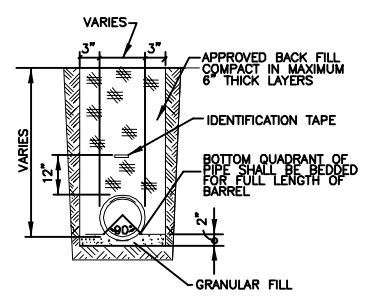

DRAIN PIPE BEDDING
N.T.S.

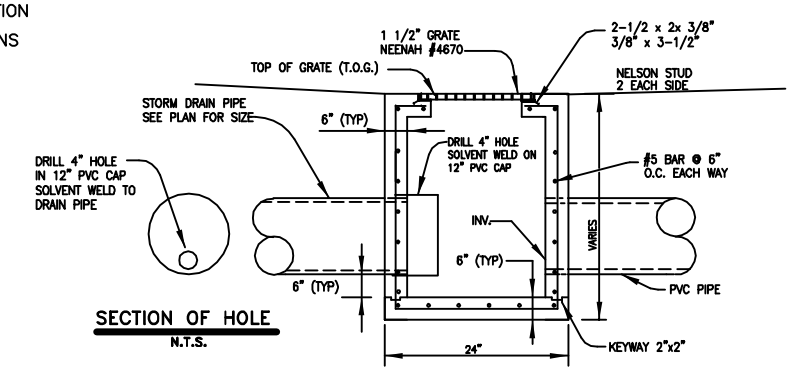

SECTION OF HOLE
N.T.S.

TYPICAL DROP INLET
N.T.S.

PAVING & DRAINAGE

FEAST CATERING
TAOS STREET
SLIDELL, LOUISIANA

FEAST CATERING/WAREHOUSE

DAMMON ENGINEERING, INC.
1095 FLORIDA AVENUE 985-649-5832 SLIDELL, LA. 70458
DAMMONENGINEERING.COM

SCALE:AS NOTED
FILE:
JOB NO. 1731
DATE:12-13-05
SHEET C-2
OF