Exported on: Feb 24 2003 and is an Un-Controlled Document

0500_3121 | D | Pro/ENGINEER | METRIC DWG

REL NO	LTR	NO	REVISION	ZONE	DR	CHKR	APPROVED	DATE
73652	A	1	PRODUCTION_RELEASE	-	DAH	DAH	RKE	09-26-96
73846	B	1	CHANGED WEIGHTS IN TABULATION	IC	GAC	DAH	RKE	11-21-96
75718	C	1	REV PER ER	-	CSE	DG	GILLETT	10-10-97
FRD12171	D	1	ADDED NOTES 7,8 & 9	-	MTA	HS	HS	07-19-02

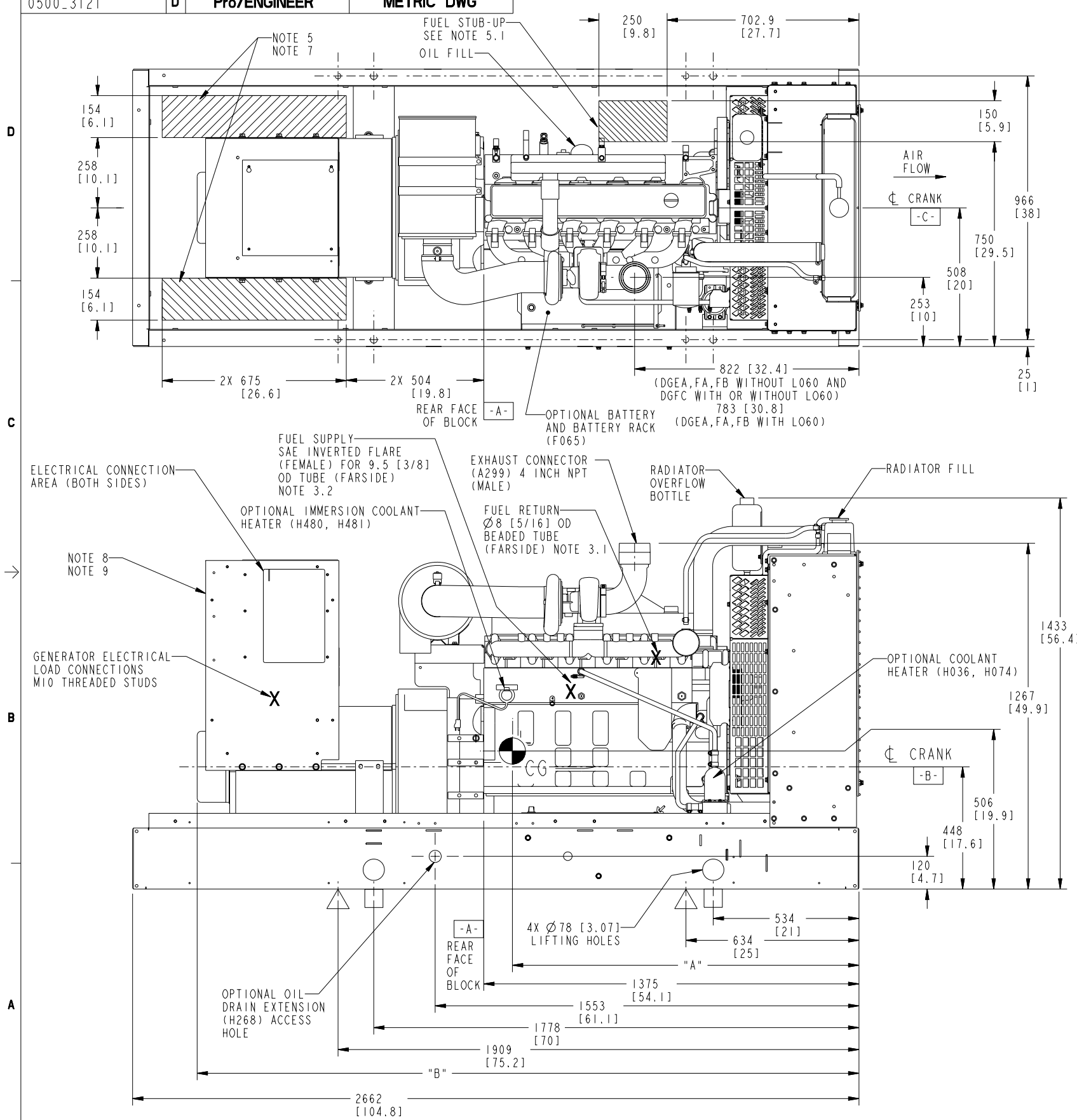

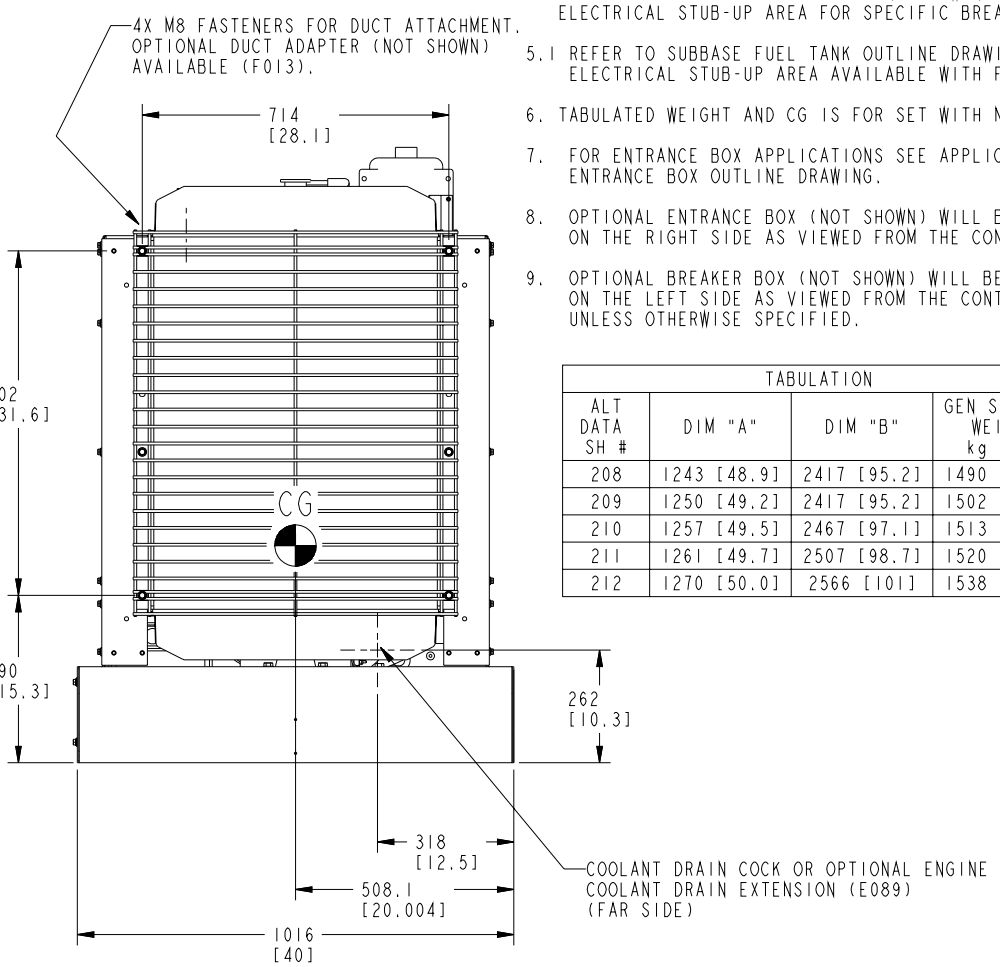

NOTES:

1. DIMENSIONS SHOWN IN [ ] ARE INCHES.
2. Ø20.7 [.81] HOLES MARKED BY △ ARE FOR 4 POINT ISOLATION MOUNTING OR SECURING TO MOUNTING SURFACE.
3. GENSET SUPPLIED WITH FLEXIBLE FUEL LINES THAT CAN BE CONNECTED TO ENGINE INTERFACE POINTS.
3.1 FUEL RETURN LINE: 960 [38] LONG WITH 1/8-27 NPT (MALE) TERMINATION.
3.2 FUEL SUPPLY LINE: 1020 [40] LONG WITH 1/4-18 NPT (MALE) TERMINATION.
4. Ø25.4 [1.0] HOLES MARKED □ ARE FOR SUBBASE FUEL TANK ATTACHMENT OR SECURING TO MOUNTING SURFACE.
5. REFER TO CIRCUIT BREAKER OUTLINE DRAWING FOR ELECTRICAL STUB-UP AREA FOR SPECIFIC BREAKERS.
5.1 REFER TO SUBBASE FUEL TANK OUTLINE DRAWING FOR ELECTRICAL STUB-UP AREA AVAILABLE WITH FUEL TANKS.
6. TABULATED WEIGHT AND CG IS FOR SET WITH NO OPTIONS.
7. FOR ENTRANCE BOX APPLICATIONS SEE APPLICABLE ENTRANCE BOX OUTLINE DRAWING.
8. OPTIONAL ENTRANCE BOX (NOT SHOWN) WILL BE MOUNTED ON THE RIGHT SIDE AS VIEWED FROM THE CONTROL.
9. OPTIONAL BREAKER BOX (NOT SHOWN) WILL BE MOUNTED ON THE LEFT SIDE AS VIEWED FROM THE CONTROL UNLESS OTHERWISE SPECIFIED.

TABULATION

ALT DATA SH #	DIM "A"	DIM "B"	GEN SET WET WEIGHT kg lb
208	1243 [48.9]	2417 [95.2]	1490 (3285)
209	1250 [49.2]	2417 [95.2]	1502 (3313)
210	1257 [49.5]	2467 [97.1]	1513 (3336)
211	1261 [49.7]	2507 [98.7]	1520 (3350)
212	1270 [50.0]	2566 [101]	1538 (3391)

HOUSING READY SKID BASE

ITEM	PART NO	DWG SIZE	DESCRIPTION OR MATERIAL	REF DES

DO NOT SCALE PRINT

TOLERANCE UNLESS OTHERWISE SPECIFIED

DIM	mm	inch
	X ± 1	.X ±
	.X ± 0.8	.XX ±
	.XX ± 0.38	.XXX±
HOLE	0.09-4.99 +0.15/-0.08	.004-.200 +.006/-.003
	5.00-9.99 +0.20/-0.10	.201-.421 +.008/-.004
	10.00-17.49 +0.25/-0.13	.422-.703 +.010/-.005
	17.50-24.99 +0.30/-0.13	.704-.999 +.012/-.005

ANG TOL± 1.0°

DRAWN TO SCALE OF 1/8

SIM TO . | COPIED FROM . | THIRD ANGLE PROJECTION | QTY

THIS DOCUMENT IS THE PROPERTY OF CUMMINS POWER GENERATION. IT CONTAINS PROPRIETARY AND CONFIDENTIAL INFORMATION WHICH MUST NOT BE DUPLICATED, USED OR DISCLOSED OTHER THAN EXPRESSLY AUTHORIZED BY CUMMINS POWER GENERATION OR ITS REPRESENTATIVE

	NAME	DATE
DR	D_HOFMEISTER	09-26-96
CHKR / MFG	S_JULIK	09-26-96
APPROVED	R.ENGELMANN	09-26-96

FOR INTERPRETATION OF DIMENSIONING AND TOLERANCING, SEE ANSI Y14.5M-1982

MODEL FIRST USED ON: DGEA,FA,FB,FC

SITE CODE: PGA

CUMMINS POWER GENERATION
1400 73RD AVE NE
MINNEAPOLIS, MINNESOTA 55432

TITLE: OUTLINE-GENSET (F179)

DWG NO: 0500_3121 | SHEET 1 of 1 | DWG SIZE D