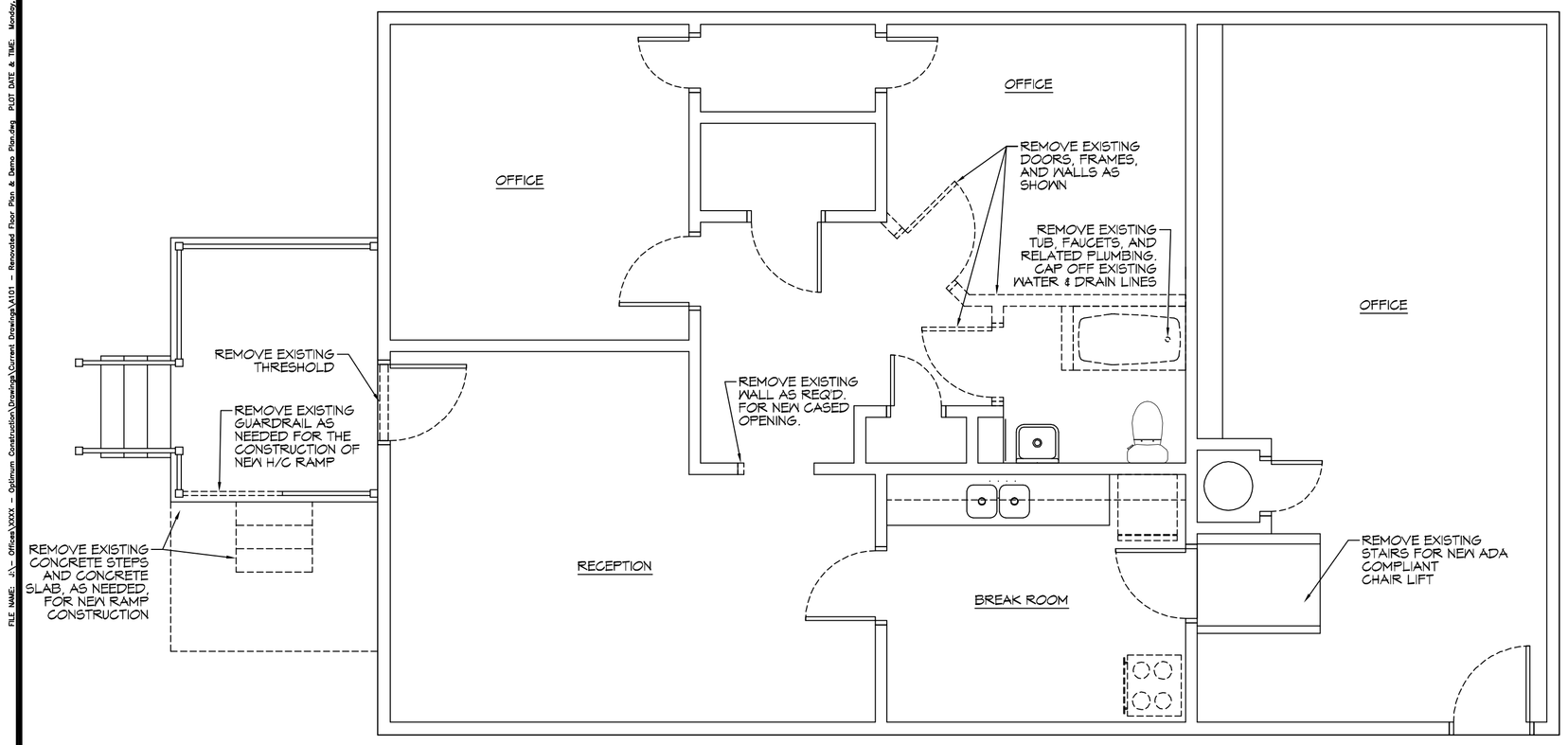

2 DEMO PLAN
SCALE: 1/4"=1'-0"

DEMOLITION PLAN

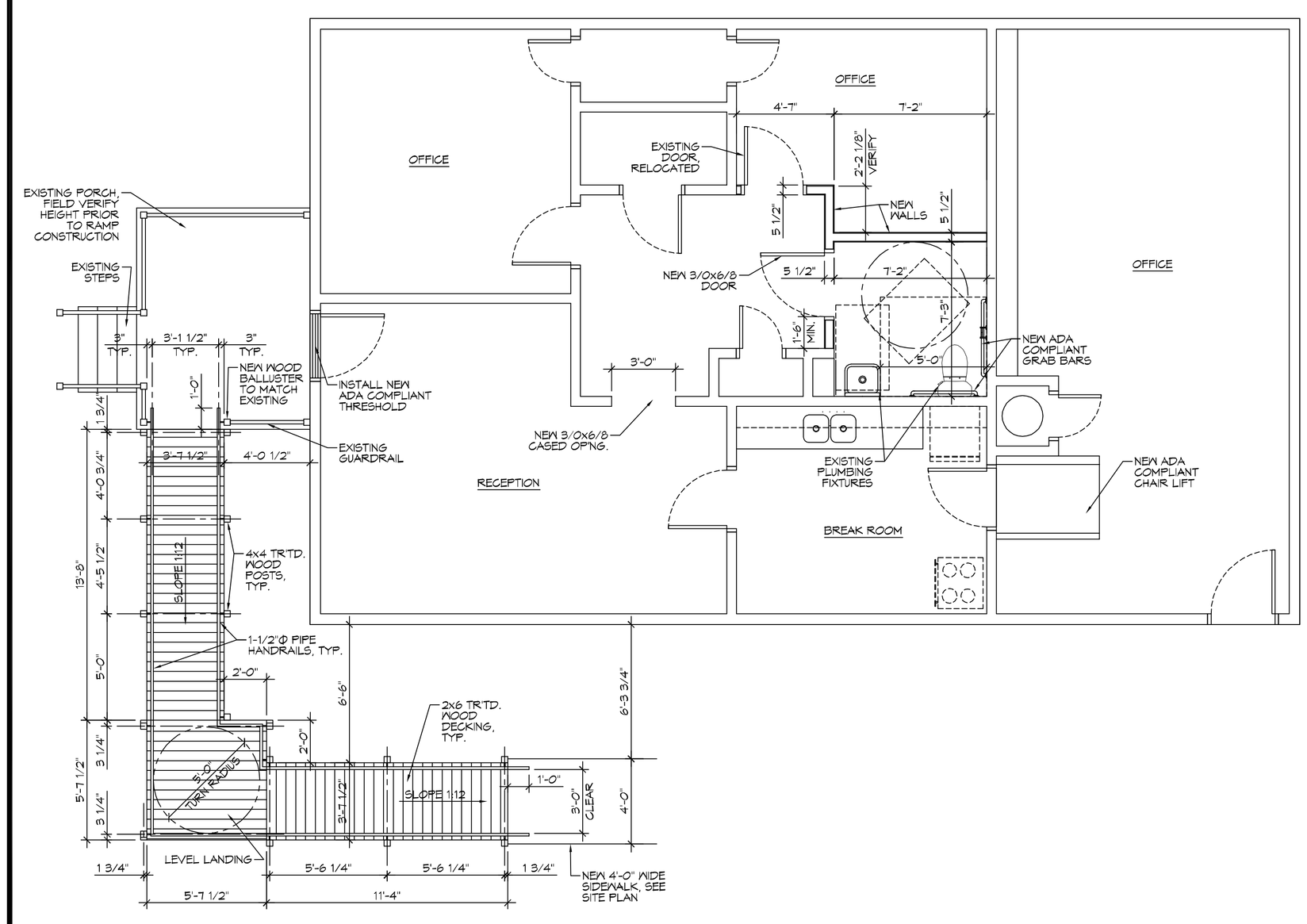

1 FLOOR PLAN
SCALE: 1/4"=1'-0"

NEWLY RENOVATED FLOOR PLAN WITH EXTERIOR H/C RAMP

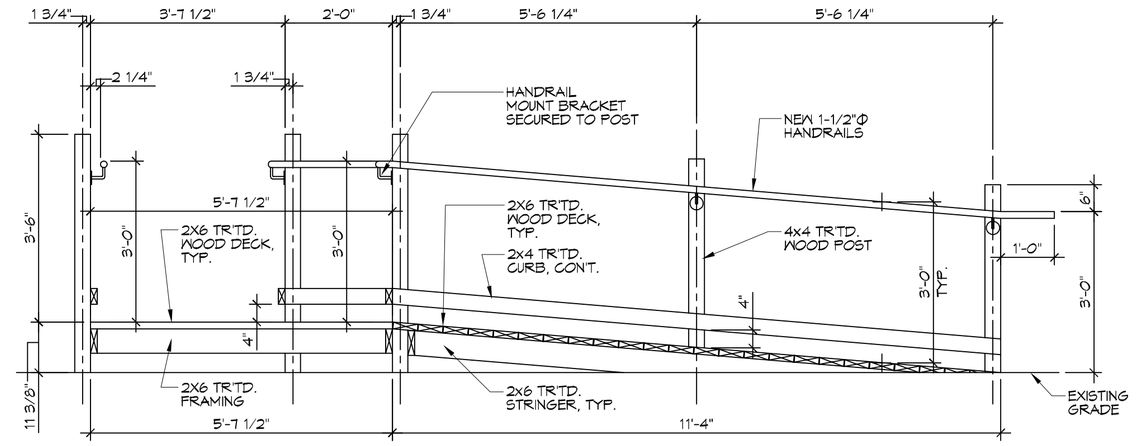

6 RAMP SECTION
SCALE: 1/2"=1'-0"

HANDICAP RAMP SHORT SIDE SECTION

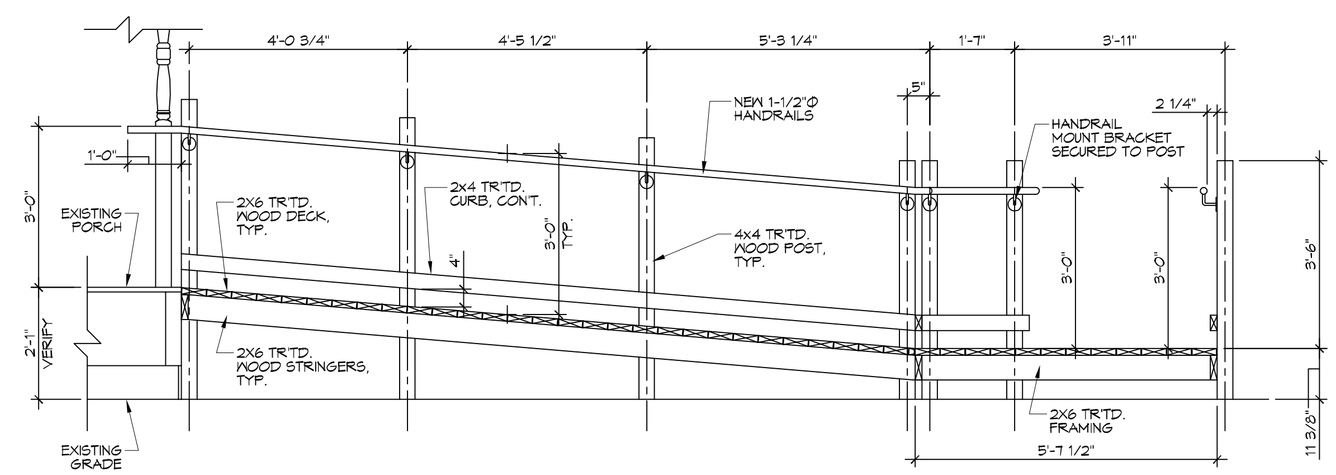

5 RAMP SECTION
SCALE: 1/2"=1'-0"

HANDICAP RAMP LONG SECTION

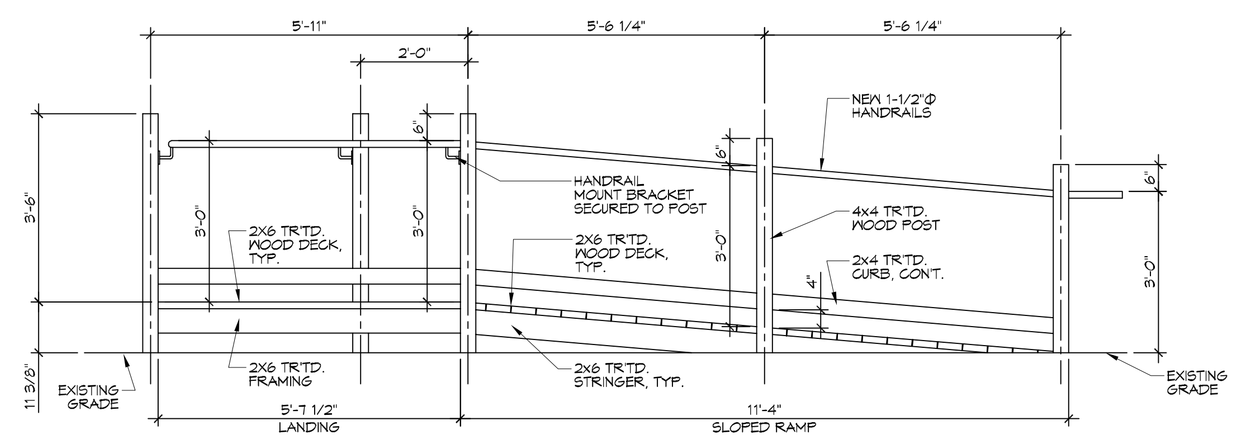

4 RAMP ELEVATION
SCALE: 1/2"=1'-0"

HANDICAP RAMP SIDE ELEVATION

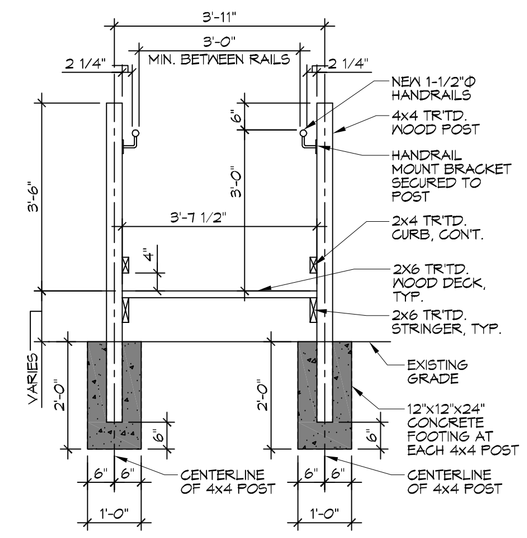

7 SECTION
SCALE: 1/2"=1'-0"

TYP. CROSS-SECTION

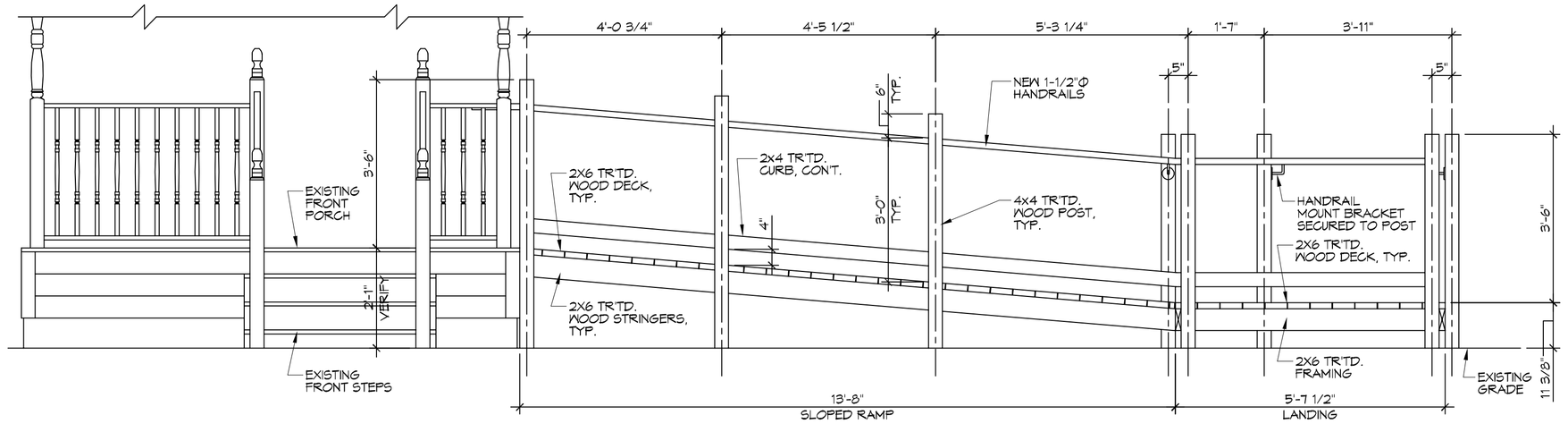

3 RAMP ELEVATION
SCALE: 1/2"=1'-0"

HANDICAP RAMP FRONT ELEVATION

DEMOLITION NOTES

1. REMOVE ALL WALLS (GYPSUM BOARD, STUDS, & OTHER FRAMING) AS INDICATED ON DEMOLITION DRAWINGS, ALONG WITH ANY ELECTRICAL AND/OR MECHANICAL ITEMS IN SAID WALLS.
2. PRIOR TO REMOVAL OF ANY ELECTRICAL AND/OR MECHANICAL ITEMS, THE CONTRACTOR SHALL COORDINATE WITH THE OWNER THE SHUTDOWN AND STARTUP SEQUENCE WITH THE NEW ELECTRICAL AND MECHANICAL WORK.
3. REMOVE ALL DOORS AND FRAMING WHERE INDICATED ON DRAWINGS.
4. REMOVE ALL PLUMBING FIXTURES WHERE INDICATED ON DRAWINGS. CAP ALL DRAIN LINES, WATER LINES, ETC.
5. THE CONTRACTOR IS RESPONSIBLE TO COMPLY WITH ALL LOCAL, STATE, AND FEDERAL REGULATIONS IN THE REMOVAL DEMOLITION OF ANY HAZARDOUS MATERIALS.
6. THE CONTRACTOR IS RESPONSIBLE FOR OBTAINING ALL PERMITS REQUIRED BY LOCAL AUTHORITIES.
7. THE CONTRACTOR IS RESPONSIBLE FOR OBTAINING APPROVALS AND NOTIFICATIONS TO ALL LOCAL, STATE, AND FEDERAL AUTHORITIES.
8. THE CONTRACTOR IS RESPONSIBLE FOR ANY DAMAGE TO ITEMS THAT ARE INTENDED TO REMAIN AND SHALL REPAIR ANY DAMAGED ITEMS TO LIKE NEW CONDITION.
9. IF NOT SHOWN ON THE DEMOLITION DRAWINGS, THE CONTRACTOR SHALL REMOVE ALL EXISTING MATERIALS AS NECESSARY TO COMPLETE ALL NEW WORK AS REQUIRED BY OTHER PORTIONS OF THE CONTRACT DOCUMENTS.
10. SALVAGE RIGHTS FOR ALL DEMOLISHED MATERIALS SHALL FIRST BE GIVEN TO THE OWNER. ANY MATERIALS NOT RETAINED BY THE OWNER SHALL BE REMOVED FROM THE SITE AND DISPOSED OF BY THE CONTRACTOR AT THE CONTRACTOR'S EXPENSE.

DAMMON ENGINEERING, INC.
LOUISIANA & MISSISSIPPI
www.dammoneng.com
info@dammoneng.com
PH: 985-649-3021 F: 985-641-9950
Chief Engineer: Brian Mistich, PE
554 Old Spanish Trail
Slidell, LA 70458

REVISIONS

#	DESCRIPTION	DATE

SEAL:

A OFFICE BUILDING & SITE RENOVATION FOR

FRAZIER INVESTMENTS INC.

John FRAZER
1352 7TH STREET
SLIDELL, LA 70458

JOB No:	-
DATE:	09-20-2016
DRAWN BY:	JTL
CHECKED BY:	JMS

THIS DRAWING IS AN INSTRUMENT OF SERVICE AND IS PROPERTY OF DAMMON ENGINEERING. ALL REPORTS, PLANS, OR SPECIFICATIONS PREPARED FOR THE USE OF THE CLIENT IDENTIFIED ON THIS PROJECT. IT IS DELIVERED FOR INFORMATION AND OBSERVATION OF THE CLIENT AND OTHERS IN CONNECTION WITH THIS PROJECT. DAMMON ENGINEERING MAKES NO REPRESENTATIONS TO ANYONE OTHER THAN THE CLIENT (AND THOSE ON WHOM THE CLIENT RELIES AS EVIDENCED BY A WRITTEN AGREEMENT BETWEEN DAMMON ENGINEERING AND THE CLIENT). ALL OTHER USES ARE UNAUTHORIZED AND AT THE SOLE RISK OF THE USER. REPRODUCTION OF THIS DOCUMENT IN WHOLE OR IN PART IS PROHIBITED WITHOUT THE WRITTEN PERMISSION OF DAMMON ENGINEERING.

SHEET TITLE:
RENOVATED FLOOR PLAN & DEMO PLAN

DRAWING NUMBER:
A101

SHEET No: 3 of 3