NOTES:

1. CONTRACTOR SHALL FIELD VERIFY ALL DIMENSIONS & DEPRESSIONS PRIOR TO COMMENCING WORK.
2. FOLLOW PILE DATA FROM ENGINEERING SOILS STUDY DATED FEBRUARY 28 2008
3. USE ASTM D-25 QUALITY PILES: 7" TIP, 12" BUTT, 5 TON CAPACITY. DRIVEN TO 40 FT BELOW EXISTING NATURAL GROUND ELEV.
4. NO FIELD SUPERVISON OR INSPECTION PROVIDED UNDER THIS SEAL UNLESS NOTED OTHERWISE.
5. PILE LAYOUT MAY BE MODIFIED DUE TO ACTUAL DRIVING CONDITIONS, ENGINEER TO BE NOTIFIED ON ANY OTHER MODIFICATION.
6. A PILE BLOW COUNT LOG OF ALL PILES SHALL BE SUBMITTED TO THE ENGINEER OF RECORD.
7. CONTRACTOR IS RESPONSIBLE FOR THE COMPARISON AND VERIFICATION OF PILE LAYOUT DIMENSIONS WITH MOST RECENT EQUIPMENT DRAWINGS, ASSURING THAT PILES DO FALL WITHIN LIMITS OF THE DESIGN.
8. ALL WATER (RAIN, RISING WATER, ETC.) SHALL BE DIRECTED AWAY FROM THE FOUNDATIONS DURING PREPARATION, PLACING AND CURING OF SAME. POSITIVE DRAINAGE MUST BE MAINTAINED AT ALL TIMES.
9. SEE "ENGINEERING" SOIL ANALYSIS AND FOLLOW RECOMMENDATIONS OF STUDY.
10. MONITOR VIBRATIONS AT NEARBY BUILDINGS.

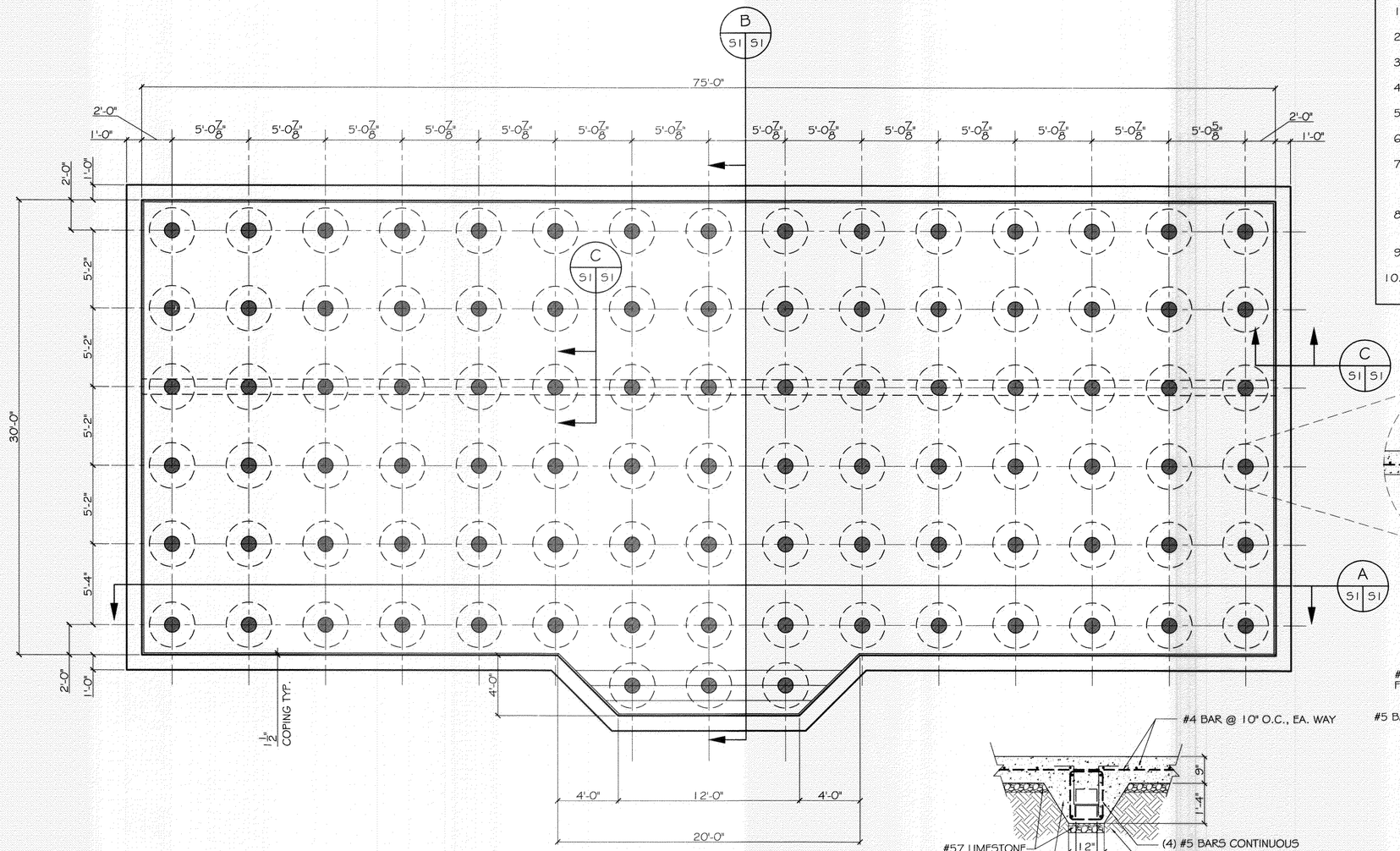

POOL PLAN
SCALE: 1/4"=1'-0"
93 PILES

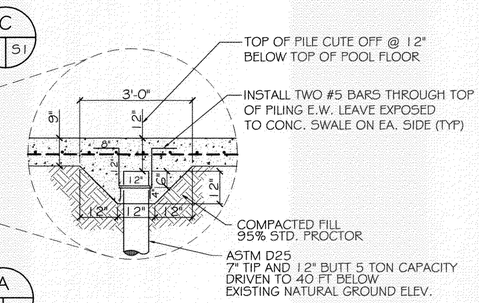

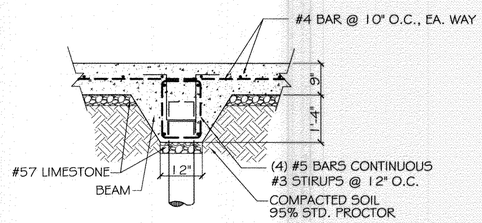

TYP. SECTION C
N.T.S.

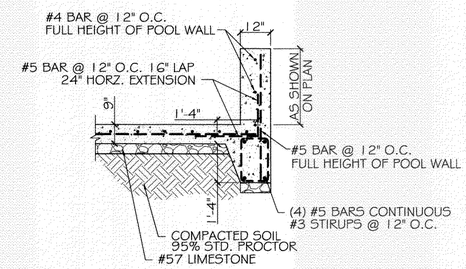

TYP. DETAIL D
N.T.S.

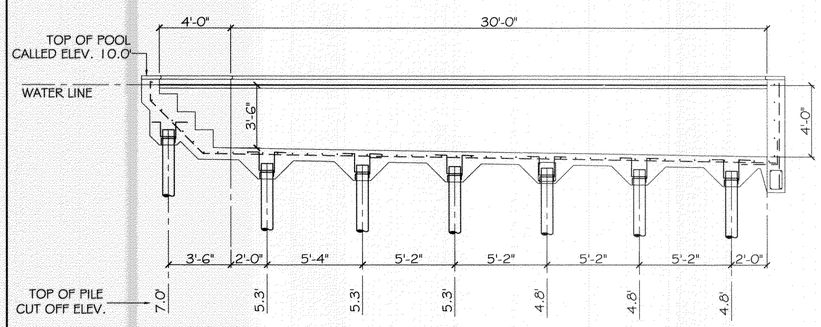

SECTION B
N.T.S.

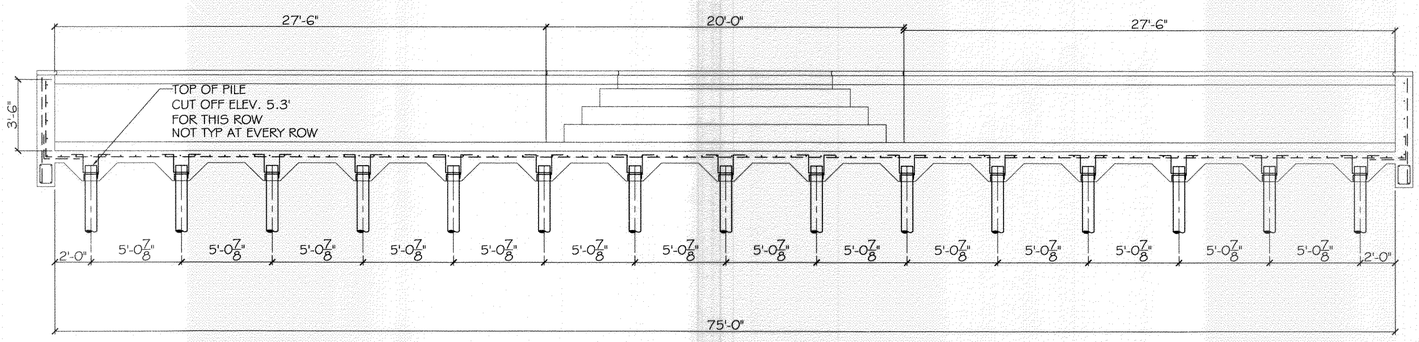

SECTION A
N.T.S.

DAMMON ENGINEERING, INC.

CHIEF ENGINEER
EMMETT
DAMMON, P.E.

CHIEF ARCHITECT
ROBERT
WILTSE

1095 FLORIDA AVENUE
SLIDELL, LA. 70458
OFFICE: 985-649-5832
FAX: 985-641-5950

WEBSITE:
WWW.DAMMONENGINEERING.COM

EMAIL:
DAMMONENG@BELLSOUTH.NET

ARCHITECTURE

ENGINEERING

STUDIES

PLANNING

INVESTIGATION

EXPERT WITNESS

ROTOLO CONSULTANTS, INC.
894 ROBERT BLVD.
SLIDELL, LA

YMCA POOL

BOOTHEVILLE
LOUISIANA

POOL PILING PLAN AND SECTIONS

STATE OF LOUISIANA
EMMETT G. DAMMON, JR.
License No. 8796
PROFESSIONAL ENGINEER

REV:

SCALE: AS NOTED

JOB#:

DATE: 5-26-10

SHEET 1

S-1

OF 1