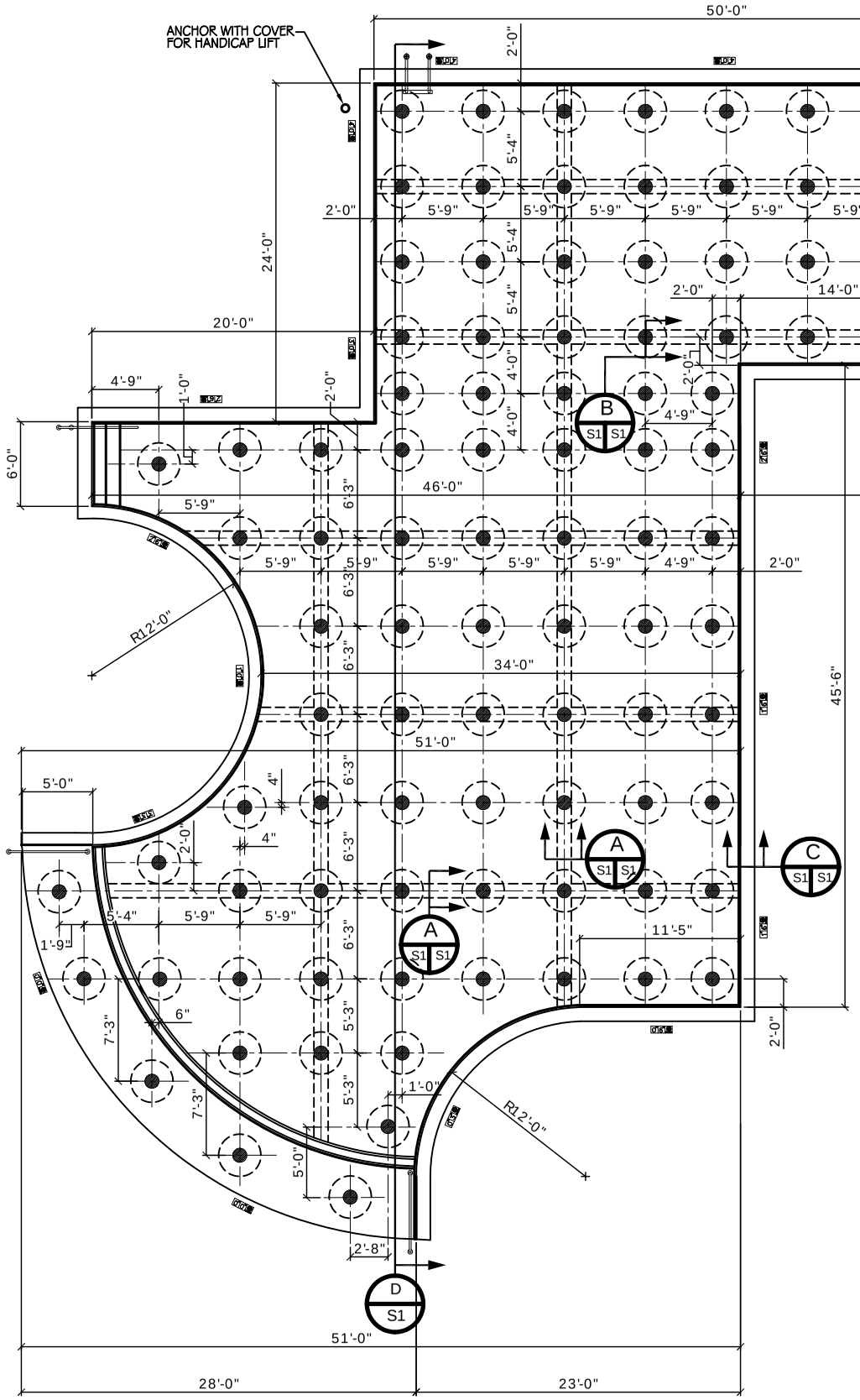

POOL PILING LAYOUT PLAN

SCALE: 3/16"= 1'

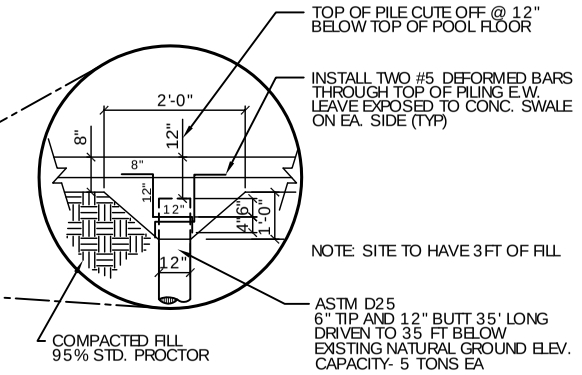

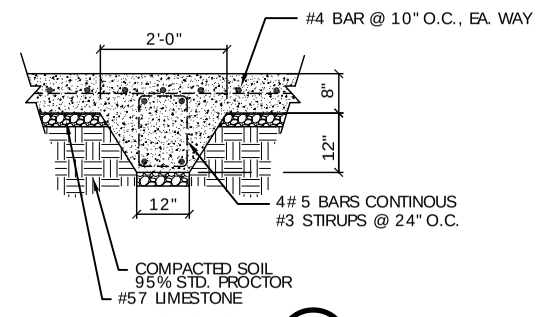

TYP. SECTION A

N.T.S.

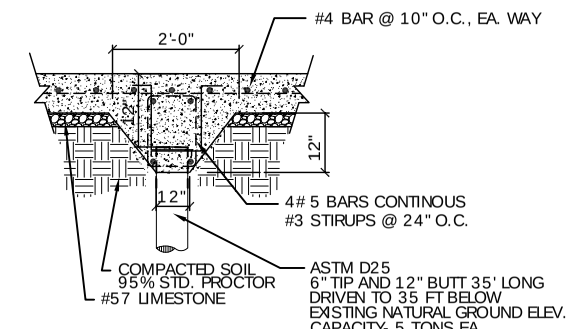

TYP. SECTION B

N.T.S.

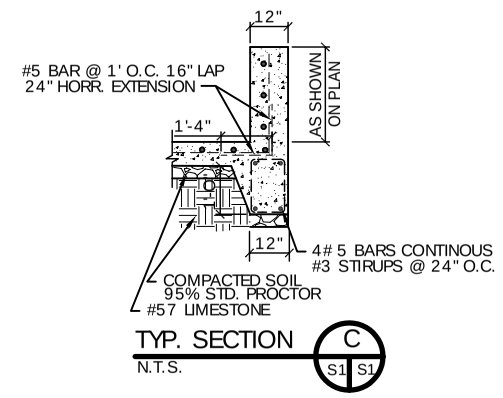

TYP. SECTION C

N.T.S.

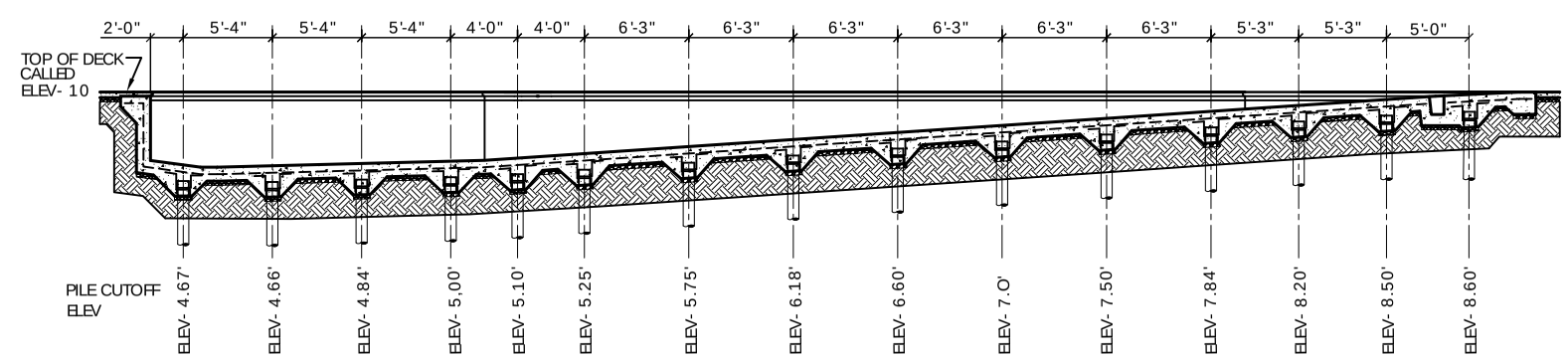

POOL SECTION D

SCALE: 3/16"= 1'

NOTES:

1. CONTRACTOR SHALL FIELD VERIFY ALL DIMENSIONS & DEPRESSIONS PRIOR TO COMMENCING WORK.
2. FOLLOW PILE DATA FROM ENGINEERING SOILS STUDY DATED JUNE 11, 2008
3. USE ASTM D-25 6" TIP, 12" BUTT, 35' LONG, 5 TON CAPACITY. DRIVEN TO 35 FT BELOW EXISTING NATURAL GROUND ELEV. (3' FILL)
4. NO FIELD SUPERVISON OR INSPECTION PROVIDED UNDER THIS SEAL UNLESS NOTED OTHERWISE.
5. PILE LAYOUT MAY BE MODIFIED DUE TO ACTUAL DRIVING CONDITIONS, ENGINEER TO BE NOTIFIED ON ANY OTHER MODIFICATION.
6. A PILE BLOW COUNT LOG OF ALL PILES IS TO BE SUBMITTED TO THE ENGINEER OF RECORD.
7. CONTRACTOR IS RESPONSIBLE FOR THE COMPARISON AND VERIFICATION OF PILE LAYOUT DIMENSIONS WITH MOST RECENT EQUIPMENT DRAWINGS, ASSURING THAT PILES DO FALL WITHIN LIMITS OF THE DESIGN.
8. ALL WATER (RAIN, RISING WATER, ETC.) SHALL BE DIRECTED AWAY FROM THE FOUNDATIONS DURING PREPARATION, PLACING AND CURING OF SAME. POSITIVE DRAINAGE MUST BE MAINTAINED AT ALL TIMES.
9. SEE "ENGINEERING" SOIL ANALYSIS AND FOLLOW RECOMMENDATIONS OF STUDY.
10. MONITOR VIBRATIONS AT NEARBY BUILDINGS.

DAMMON
ENGINEERING, INC

CHIEF ENGINEER
EMMETT
DAMMON, P.E.

CHIEF ARCHITECT
ROBERT
WILTSE

1095 FLORIDA AVENUE
SLIDELL, LA. 70458
OFFICE: 985-649-5832
FAX: 985-641-5950

WEBSITE:
WWW.DAMMONENGINEERING.COM

EMAIL:
DAMMONENG@BELLSOUTH.NET

ARCHITECTURE

ENGINEERING

STUDIES

PLANNING

INVESTIGATION

EXPERT WITNESS

ROTOLO
CONSULTANTS, INC
894 ROBERT BLVD
SLIDELL, LA

YMCA POOL

PORT SULPHUR
LOUISIANA

POOL PILING
PLAN AND
SECTIONS

REV:

SCALE: AS NOTED

JOB#:

DATE: 5-18-10

SHEET 1

S-1

OF 2