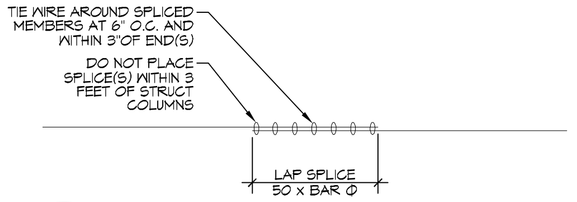

J S102|S101 **DETAIL** SCALE: 1/2" = 1'-0"

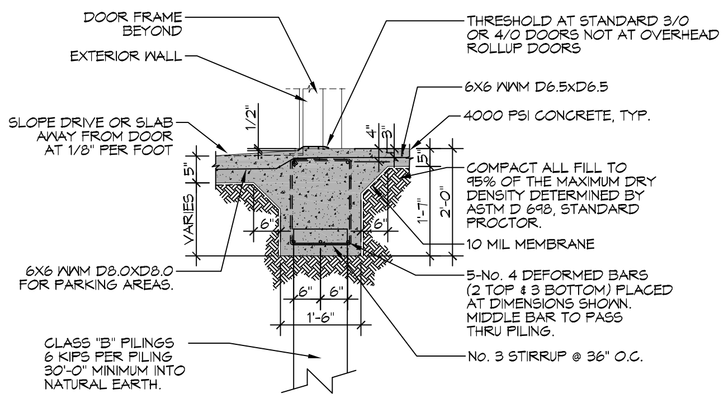

G S102|S101 **SECTION** SCALE: 1/2" = 1'-0"

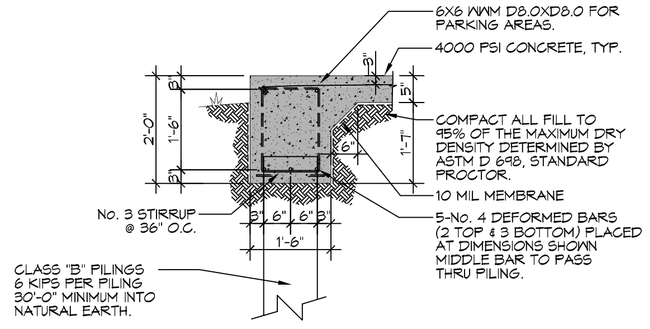

H S102|S101 **SECTION** SCALE: 1/2" = 1'-0"

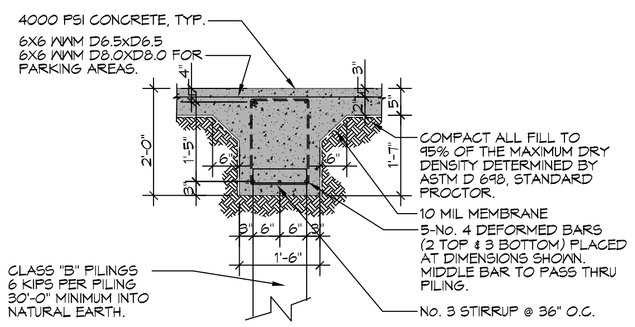

E S102|S101 **SECTION** SCALE: 1/2" = 1'-0"

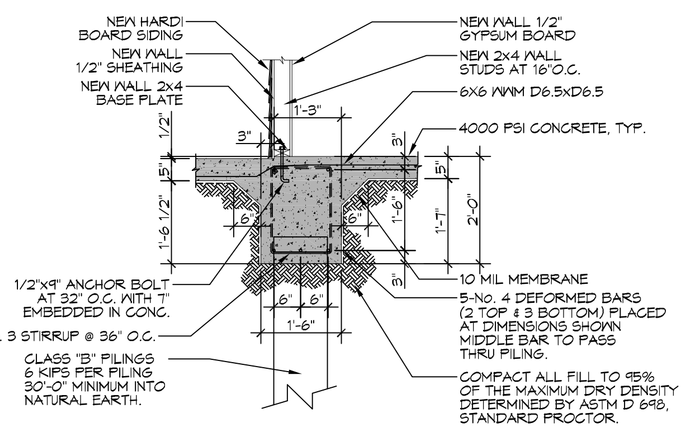

F S102|S101 **SECTION** SCALE: 1/2" = 1'-0"

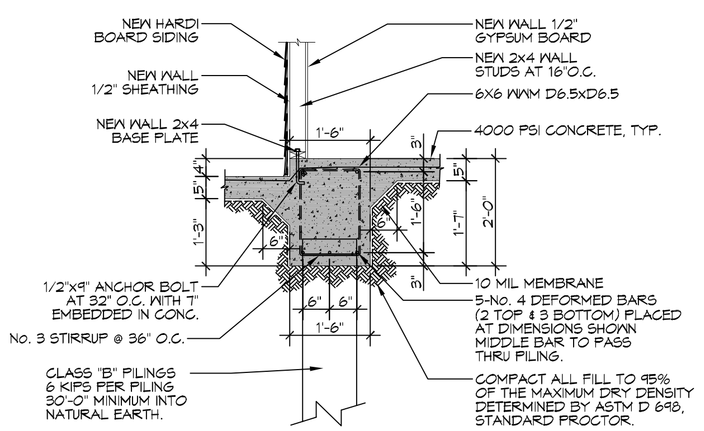

C S102|S101 **SECTION** SCALE: 1/2" = 1'-0"

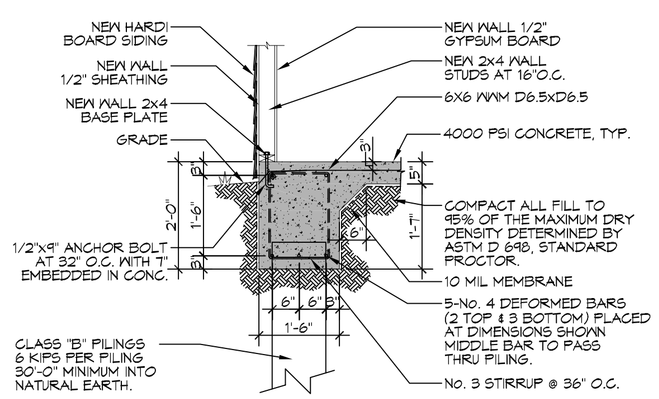

D S102|S101 **SECTION** SCALE: 1/2" = 1'-0"

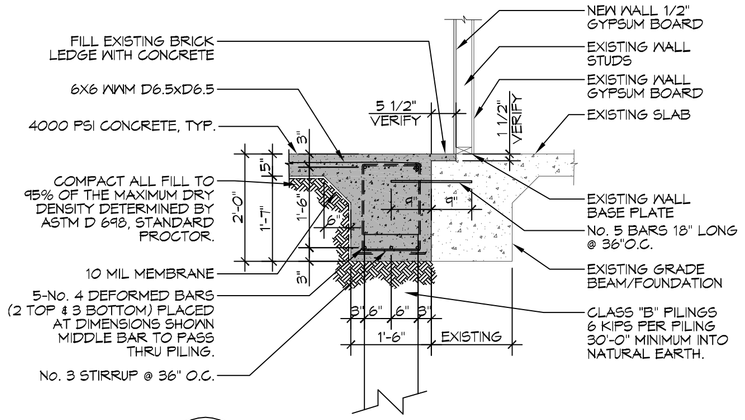

A S102|S101 **SECTION** SCALE: 1/2" = 1'-0"

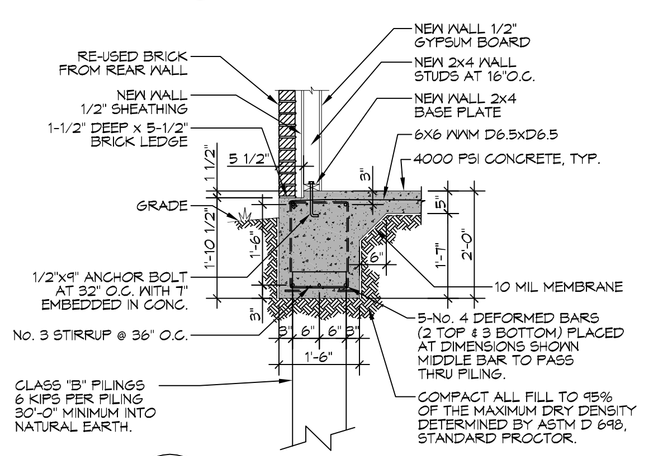

B S102|S101 **SECTION** SCALE: 1/2" = 1'-0"

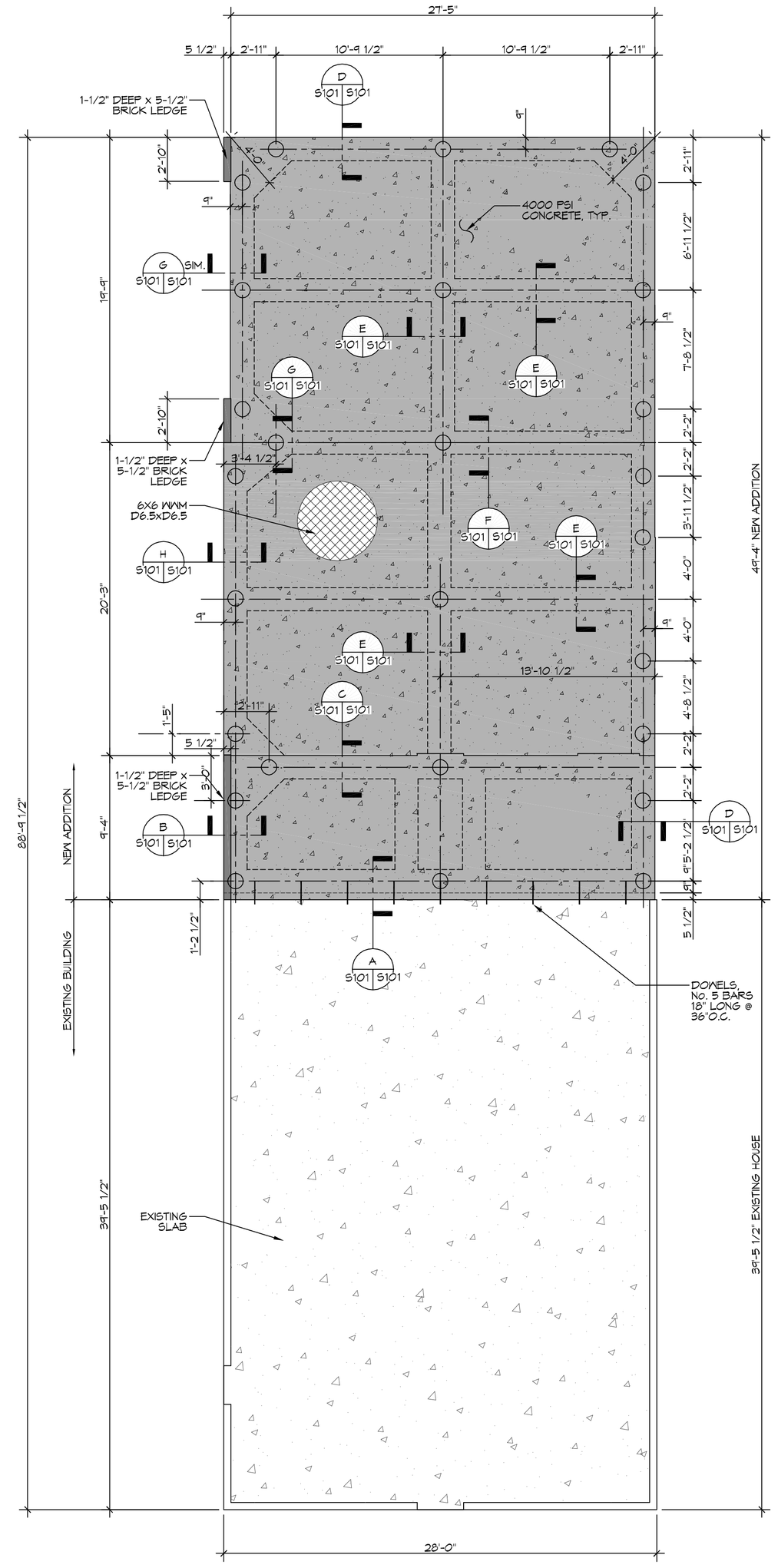

1 **FOUNDATION PLAN** SCALE: 3/16" = 1'-0"

EXISTING SLAB WITH NEW FOUNDATION ADDITION

GENERAL FOUNDATION NOTES

1. ALL DIMENSIONS ARE EDGE OF CONCRETE (EOC) TO EDGE OF CONCRETE (EOC) UNLESS NOTED OTHERWISE.
2. VERIFY ALL PLUMBING ROUGH-IN LOCATIONS ON ARCHITECTURAL DWGS.
3. CONCRETE MIX SHALL HAVE A MINIMUM COMPRESSIVE STRENGTH OF 4000 PSI AT 28 DAYS. CONCRETE MIX SHALL BE IN ACCORDANCE WITH ACI-318.
4. ALL CONVENTIONAL REINFORCING STEEL SHALL MEET ASTM-A615 (GRADE 60).
5. ONE LAYER OF POLYETHYLENE VAPOR BARRIER SHALL BE PLACED UNDER ALL CONCRETE. VAPOR RETARDER TO BE MINIMUM 10 MIL. THICKNESS; ASTM E 1745 CLASS A, PERMEANCE LESS THAN 0.01 PERMS, EQUAL TO STEGO INDUSTRIES STEGO WRAP, ECOSHIELD-E 15 MIL BY EPRO, OR IRONBAR 15 BY FLATIRON FILMS. PROVIDE APPROPRIATE ACCESSORIES FOR A COMPLETE SYSTEM.
6. ALL REINFORCING STEEL AND MESH SHALL BE SECURELY SUPPORTED TO PREVENT BOTH VERTICAL AND HORIZONTAL MOVEMENT DURING CONCRETE PLACEMENT.
7. THE CONTRACTOR SHALL VERIFY ALL DROPS, OFFSETS, BRICK LEDGES, DIMENSIONS AND CONFIGURATIONS. CONTRACTOR MUST BE RESPONSIBLE FOR SAME.
8. GRADE BEAM DIMENSIONS MAY VARY BY -5%, +20%.
9. ALL SOIL BELOW SLAB SHALL RECEIVE TERMITE TREATMENT.

GENERAL PILING NOTES

1. ALL PILES SHALL BE PRESSURE-TREATED ROUND TIMBER PILES CONFORMING TO ASTM D25.
2. PILINGS SHALL BE CLASS "B" PILES, CAPACITY SHALL BE 6 KIPS EACH, DRIVEN TO 30 FT. BELOW NATURAL GRADE OR REFUSAL. PRE DRILLING MAY BE REQUIRED. IF PREDRILLING IS PERFORMED, PREDRILL TO A MAXIMUM DEPTH OF 15 FT. USING A WET ROTARY DRILL WITH A BIT NO LARGER THAN 6 INCHES.
3. USE DROP HAMMER OR SINGLE ACTING AIR HAMMER DELIVERING 7,500 FT-LBS OF ENERGY PER BLOW. RAM WEIGHT OF DROP HAMMER SHALL NOT EXCEED 2,500 TO 3,000 LBS AND THE DROP SHOULD NOT EXCEED 3 FT., AT MINIMUM OF 25 BLOWS PER FOOT. IF THE DROP EXCEEDS 3 FT., CONTACT ENGINEER FOR INSTRUCTIONS.
4. TREAT ALL FIELD CUTS, HOLES OR OTHER PENETRATIONS INTO PILINGS IN ACCORDING TO AWPA M4, FIELD APPLIED WOOD PRESERVATIVE.
5. CONTRACTOR SHALL PERFORM A STATIC LOAD TEST ON 10% OF DRIVEN PILES. THESE TEST SHALL BE CONDUCTED IN ACCORDANCE WITH THE LATEST REVISION OF ASTM D1143, STANDARD TEST METHOD FOR PILES UNDER STATIC AXIAL COMPRESSIVE LOAD. CONTRACTOR SHALL SUBMIT NOTARIZED AFFIDAVIT TO THE ENGINEER UPON COMPLETION VERIFYING THAT ALL PILES HAVE BEEN DRIVEN PER PLANS.
6. PROVIDE AND MAINTAIN IMMEDIATE SITE DRAINAGE BEFORE, DURING AND AFTER CONSTRUCTION. PROVIDE GRADING, SWALES AND SUMP PUMPS AS MAY BE REQUIRED TO IMMEDIATELY DRAIN ALL RAIN WATER FROM THE CONSTRUCTION AREA. GOOD SURFACE DRAINAGE WITH POSITIVE COLLECTION AND RUNOFF AND SLOPES AWAY FROM THE CENTER OF THE BUILDING SHOULD BE ASSURED.

DAMMON ENGINEERING, INC.
LOUISIANA & MISSISSIPPI
www.dammonengineering.com
info@dammonengineering.com
PH: 985.649.5832 F: 985.641.5950
Chief Engineer: Brian Mistich, PE
554 Old Spanish Trail
Slidell, LA 70458

#	DESCRIPTION	REVISIONS	DATE

SEAL:

PRELIMINARY NOT FOR CONSTRUCTION

RENOVATIONS AND ADDITIONS TO
THE MARLOWE RESIDENCE
8009 SHIRLEY STREET
METAIRIE, LA 70003

JOB No:	[#####]	DATE:	10-26-16
DRAWN BY:	JTL	CHECKED BY:	CKD

This drawing and specifications, designs and arrangements represented thereby are and shall remain the property of Dammon Engineering, and no part thereof shall be used for any purpose not specifically agreed to in writing by Dammon Engineering. Dammon Engineering, Inc. assumes no responsibility for any alterations made to this document without the written consent of Dammon Engineering. Read special notes and specifications and construct accordingly. Do not scale drawings. Verify all dimensions and conditions.

SHEET TITLE:
FOUNDATION PLAN

DRAWING NUMBER:
S101

SHEET No: 3 of 7

FILE NAME: J:\1_RESIDENTIAL\Old MARLOWE\Drawings\Current Drawings\S101 - Foundation Plan.dwg AUTO SAVE & TIME: Thursday, December 22, 2016 4:04:05 PM