ELECTRICAL NOTES

1. ALL WORK SHALL CONFORM TO THE LATEST EDITION OF THE NATIONAL ELECTRICAL CODE, THE GOVERNING ELECTRICAL CODE AND ALL OTHER INSPECTION DEPARTMENTS HAVING JURISDICTION. OBTAIN CERTIFICATES OR APPROVAL WHERE REQUIRED.
2. ALL MATERIALS FURNISHED SHALL BE NEW AND SHALL BE U.L. LISTED.
3. THE DRAWINGS INDICATE SIZE AND GENERAL LOCATION OF WORK. SCALE DIMENSIONS SHALL NOT BE USED. THE EXACT LOCATION AND LOCATION OF ALL LIGHTING FIXTURES, RECEPTACLES AND TELEPHONE OUTLETS, ETC. SHALL BE DETERMINED BY ACTUAL CONDITIONS IN THE FIELD.
4. PRIOR TO BIDDING, CONTRACTOR SHALL VISIT THE JOB SITE AND FAMILIARIZE THEMSELVES WITH THE EXISTING CONDITIONS.
5. ELECTRICAL CONTRACTOR SHALL COORDINATE HIS WORK WITH OTHER TRADES AND WITH OTHER CONTRACTORS WHOSE WORK MAY AFFECT THIS INSTALLATION.
6. ELECTRICAL CONTRACTOR SHALL COORDINATE INCOMING ELECTRICAL SERVICE WITH UTILITY COMPANY AND INCLUDE IN HIS BID ALL CHARGES AND FEES INCURRED IN MODIFICATIONS.
7. WHERE MORE THAN ONE SWITCH OCCURS IN THE SAME LOCATION, THEY SHALL BE INSTALLED IN A GANG TYPE BOX UNDER ONE COVER PLATE.
8. ELECTRICAL CONTRACTOR SHALL COORDINATE THE TELEPHONE INSTALLATION WITH THE TELEPHONE COMPANY AND THE GENERAL CONTRACTOR.
9. ELECTRICAL CONTRACTOR, BEFORE INSTALLING ANY OF THE WORK, SHALL SEE THAT IT DOES NOT INTERFERE WITH CLEARANCES REQUIRED FOR FINISHED COLUMNS, HUNG CEILINGS, PLASTER, PARTITIONS, WALLS, ETC. AS SHOWN IN THE ARCHITECTURAL DRAWINGS AND DETAILS. IF ANY WORK IS INSTALLED AND IT LATER DEVELOPS THAT SUCH DETAILS OR DESIGN CANNOT BE FOLLOWED, THE CONTRACTOR, AT HIS OWN EXPENSE, SHALL MAKE SUCH CHANGES IN THE WORK AS DIRECTED BY THE ARCHITECT. AS WELL AS TO PERMIT THE INSTALLATION OF THE ARCHITECTURAL WORK AS SHOWN ON THE PLANS AND DETAILS. M-2 MC MAY BE USED FOR LIGHTING WHIPS.
10. PERFORM TEST REQUIRED BY THE OWNER OR THE ENGINEER IN CONNECTION WITH THE OPERATION OF THE ELECTRICAL SYSTEM IN THE BUILDING.
11. ALL TESTS SHALL BE MADE IN ACCORDANCE WITH THE LATEST STANDARD OF THE IEEE AND THE NATIONAL ELECTRICAL CODE.
12. MINIMUM CONDUCTOR SIZE SHALL BE #12, 600V INSULATION. MINIMUM SIZE CONDUIT SHALL BE ¾" EMT FOR INTERIOR USE, AND ¾" RIGID ALUMINUM FOR EXTERIOR USE. USE TYPE NMC CABLE COPPER, FOR LIGHTS AND RECEPTACLE CIRCUITS. EXTERIOR FITTINGS SHALL BE CAST BOXES AND COVERS/. INTERIOR FITTINGS SHALL BE CAST WHERE EXPOSED ON WALLS. STAMPED BOXES MAY BE USED ABOVE CEILINGS IN AIR CONDITIONED SPACES.
13. CONTRACTOR SHALL INSTALL WIRING AND OTHER CIRCUIT COMPONENTS TO MATCH EQUIPMENT ACTUALLY INSTALLED.
14. INSTALL GROUND FAULT RECEPTACLES AT RECEPTACLE LOCATIONS WITHIN 5' OF SINKS OR LAVATORIES, AND AT EXTERIOR LOCATIONS. EXTERIOR RECEPTACLES SHALL ALSO BE WATERPROOF.
15. BONDING AND GROUNDING SHALL BE IN ACCORDANCE WITH NFPA 70:230-63, NFPR 250-23, 250-71 &250-72.
16. GROUND NEUTRAL IN ACCORDANCE WITH NFPA 70:250-23b.
17. FUSES SHALL BE ITT CLASS K5, 250 VOLT, 200,000 AMP INTERRUPTING CAP.
18. PROVIDE SERVICES OF A FIRE/SMOKE DETECTION AND ALARM COMPANY TO DESIGN AND INSTALL ALARM SYSTEM TO MEET REQUIREMENTS OF THE STATE FIRE MARSHALL.
19. EXTERIOR LIGHTING SHALL BE SHADED OR INWARDLY DIRECTED IN SUCH A MANNER SO THAT NO DIRECT LIGHTING OR GLARE IS CAST BEYOND THE PROPERTY LINE. THE INTENSITY OF SUCH LIGHTING SHALL NOT EXCEED ONE FOOT CANDLE AS MEASURED AT THE ABUTTING PROPERTY LINE.
20. ALL ELECTRICAL, MECHANICAL AND PLUMBING PENETRATING FIRE PARTITIONS SHALL BE FIRE CAULKED. (PENETRATIONS THROUGH RATED CONSTRUCTION SHALL BE SEALED WITH A MATERIAL CAPABLE OF PREVENTING THE PASSAGE OF FLAMES AND HOT GASES WHEN TESTED IN ACCORDANCE WITH ASTM-E814.)

ELECTRICAL LOAD SUMMARY - 800A SERVICE

LOAD SOURCE	3Ø-kVA	1Ø-kVA	OR	1Ø-kW	3Ø-kW
BUILDING LIGHTING	18.3k				
ELECTRIC WATER HEATING	2.6k				
HEAT PUMP	-				
SUPPLEMENTAL HEAT SYSTEM	211.2k				
AIR CONDITIONING	-				
ELECTRIC HEATING (CIRCLE - PRIMARY/SECONDARY)	-				
COOKING	-				
REFRIGERATION	13.3k				
RECEPTACLES (STANDARD)	109.1k				
RECEPTACLES (COMPUTER)	-				
TOTAL MOTORS (EXCLUDE HVAC)	-				
PARKING LOT / EXTERIOR LIGHTING	3.3k				
MISCELLANEOUS	-				
OTHER (SPECIFY)	-				
TOTAL	357.8k				

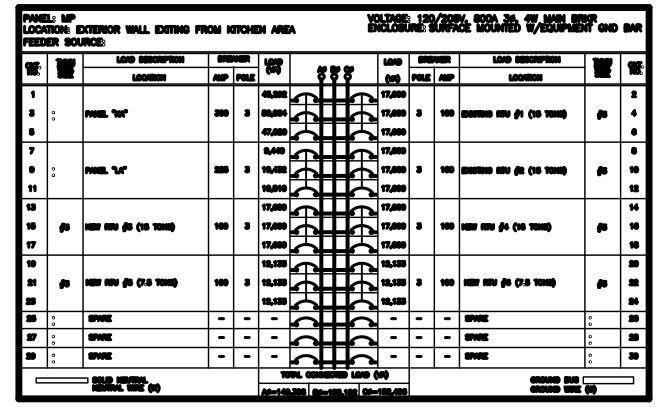

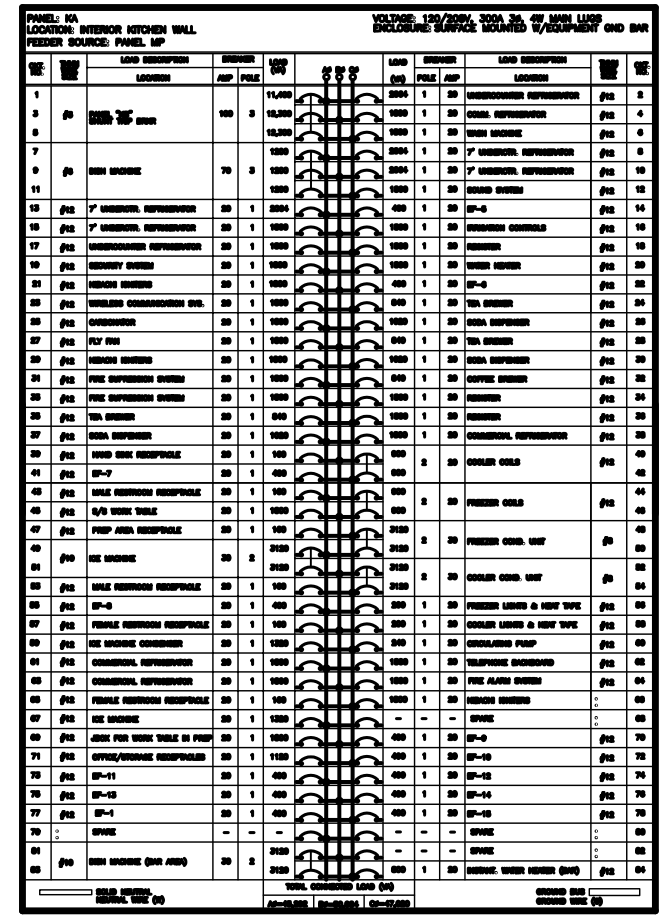

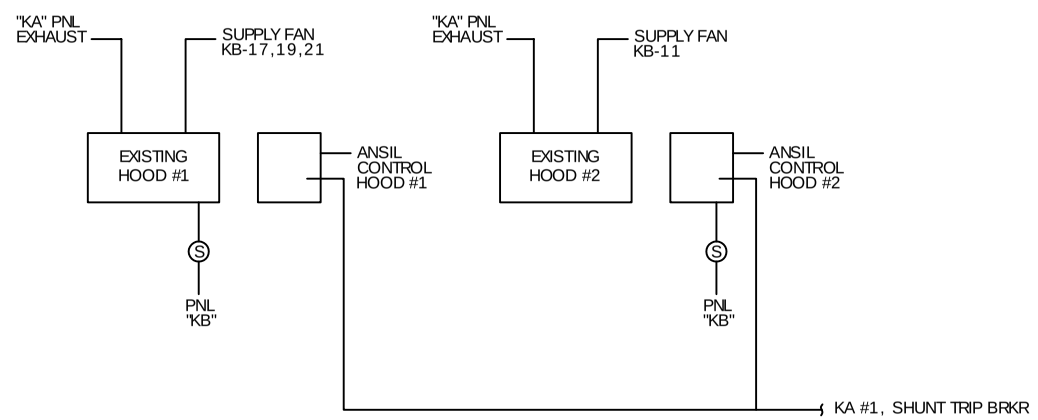

DUAL HOOD ONE LINE

N.T.S.

EXHAUST FAN SCHEDULE

LOC	CFM	VOLTAGE	TYPE	MANF.
TOILETS	SEE DWG	120	VENT/LIGHT	-
EF-1	150	120	VENT	GREENHECK
EF-2	3840	120	HOOD	EXIST.
EF-3	750	120	HOOD	EXIST.
EF-4	450	120	HOOD	EXIST.
EF-5	200	120	VENT	GREENHECK
EF-6	150	120	VENT	GREENHECK
EF-7	150	120	VENT	GREENHECK
EF-8	845	120	HIBACHI TBL	ROASTER TEC
EF-9	845	120	HIBACHI TBL	ROASTER TEC
EF-10	845	120	HIBACHI TBL	ROASTER TEC
EF-11	845	120	HIBACHI TBL	ROASTER TEC
EF-12	845	120	HIBACHI TBL	ROASTER TEC
EF-13	845	120	HIBACHI TBL	ROASTER TEC
EF-14	845	120	HIBACHI TBL	ROASTER TEC
EF-15	600	120	VENT	GREENHECK

1. HOOD MFG. WILL FURNISH, FOR INSTALLATION AND CONNECTION BY THIS CONTRACTOR, PRE-WIRED STARTER PACKAGES FOR HOOD EXHAUST AND MAKE-UP AIR FANS AS FOLLOWS:

STARTER PACKAGE (S.P. #1)
MUA-1 MAGNETIC STARTER PRE-WIRED
EF-2 MAGNETIC STARTED PRE-WIRED
S.P. #2:
EF-3 MAGNETIC STARTER PRE-WIRED
S.P. #3:
EF-4 MAGNETIC STARTER PRE-WIRED

HOOD FIRE SUPPRESSION SYSTEM RELAY MOUNTED IN SINGLE ENCLOSURE

☒ CONTROL CONTACTOR

NOTE:
ALL EXISTING MOTORS AND CONTACTORS SHALL BE VERIFIED BY ELECTRICAL CONTRACTOR.

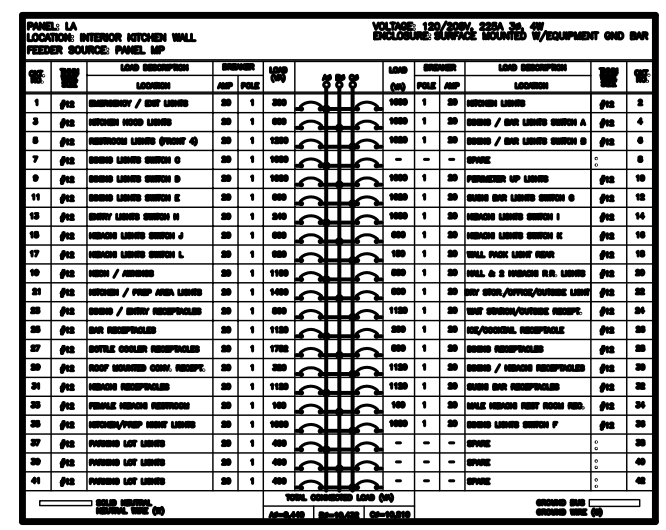

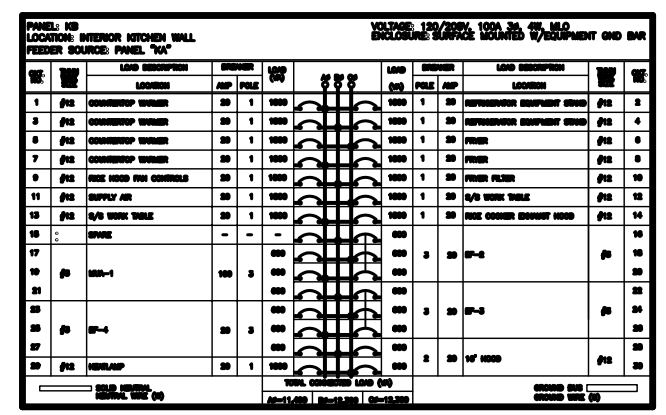

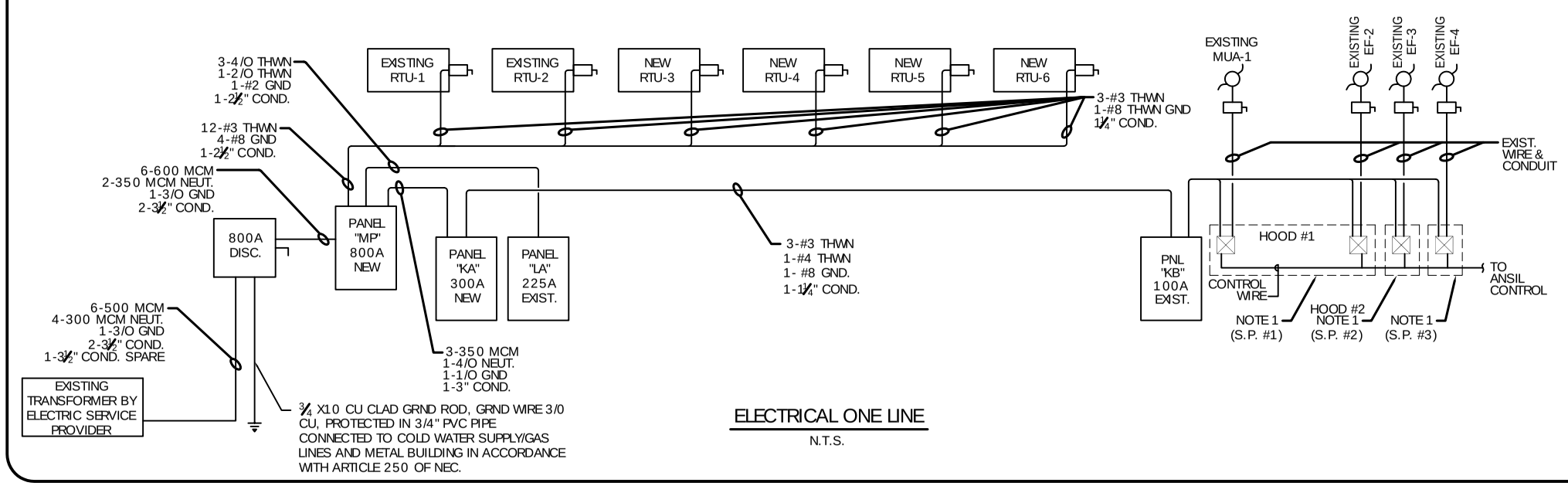

ELECTRICAL ONE LINE

N.T.S.

DAMMON ENGINEERING, INC.

CHIEF ENGINEER
EMMETT DAMMON, P.E.

CHIEF ARCHITECT
ROBERT WILTSE

1095 FLORIDA AVENUE
SLIDELL, LA. 70458
OFFICE: 985-649-5832
FAX: 985-641-5950

WEBSITE:
WWW.DAMMONENGINEERING.COM

EMAIL:
DAMMONENG@BELLSOUTH.NET

ARCHITECTURE

ENGINEERING

STUDIES

PLANNING

INVESTIGATION

EXPERT WITNESS

RESTAURANT RENOVATION

OSAKA
287 S. MORRISON BLVD.
HAMMOND, LA

ELECTRICAL NOTES, DETAILS AND ELEC. PANELS

REV:

SCALE: AS NOTED

JOB#: 1943

DATE: 7-25-08

SHEET 20

E-3

OF 22