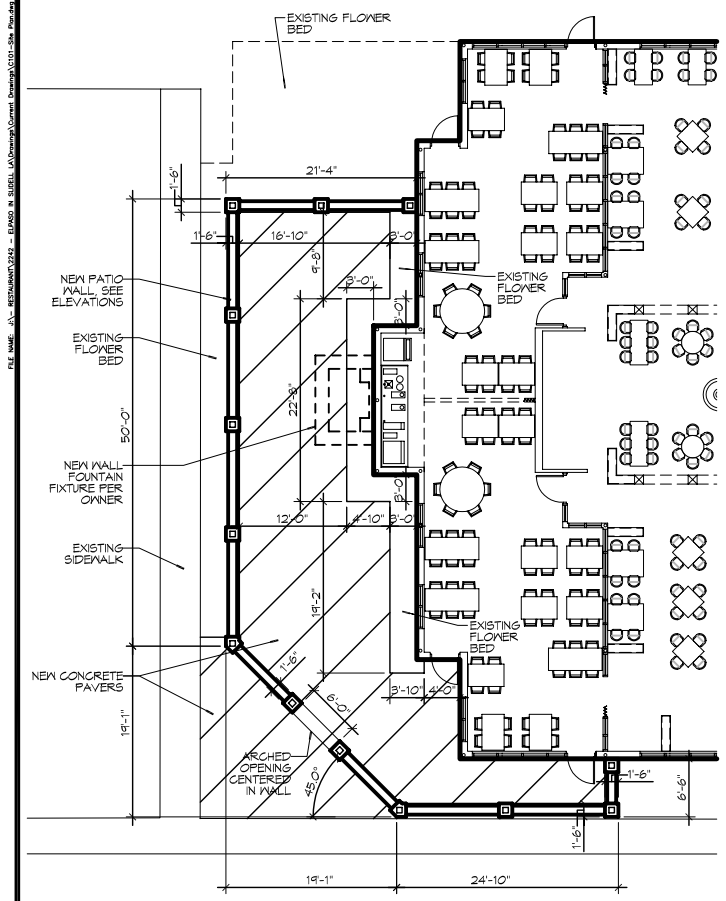

2 NEW PATIO PLAN
SCALE: 1"=10'-0"

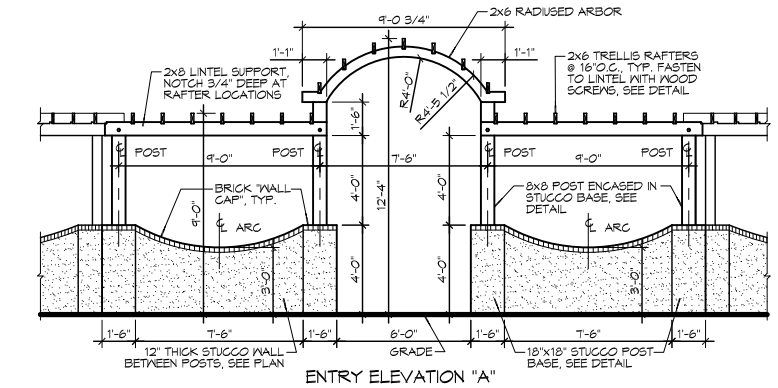

ENTRY ELEVATION "A"

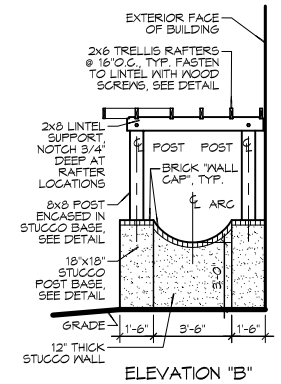

ELEVATION "B"

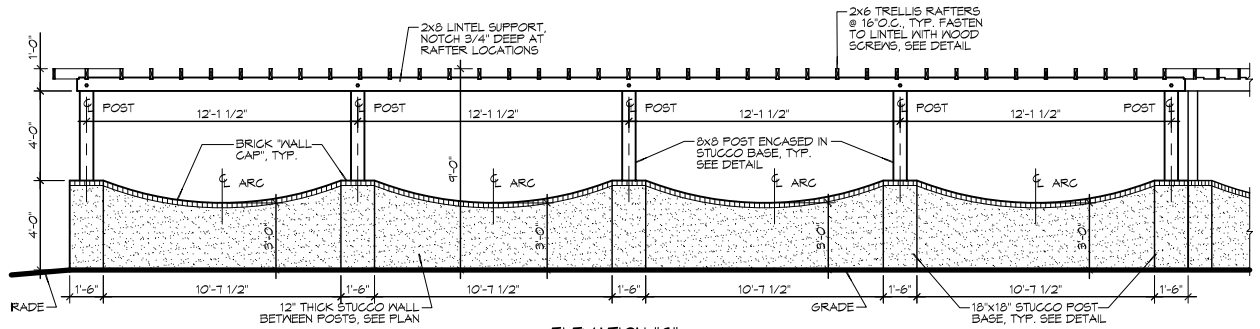

ELEVATION "C"

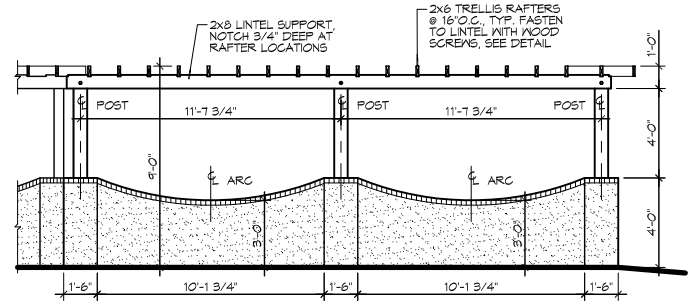

ELEVATION "D"

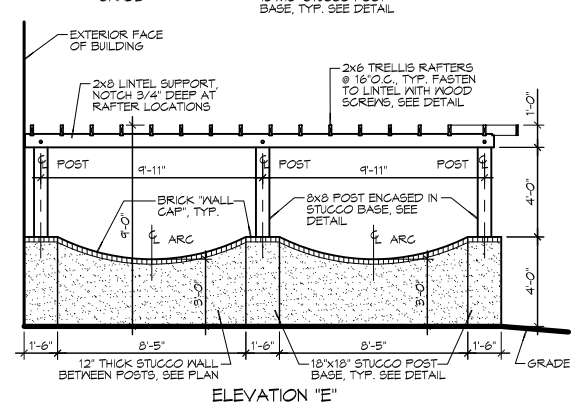

ELEVATION "E"

3 NEW PATIO WALL ELEVATIONS
SCALE: 1/4"=1'-0"

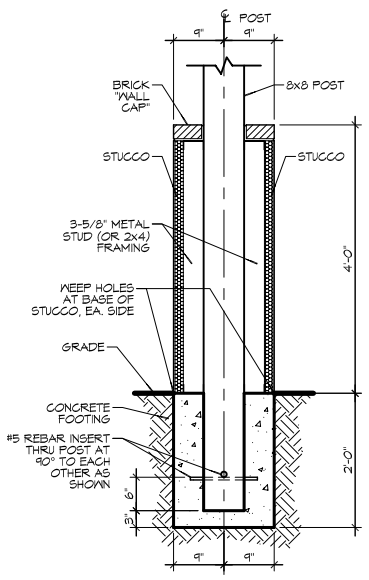

4 POST DETAIL
SCALE: 3/4"=1'-0"

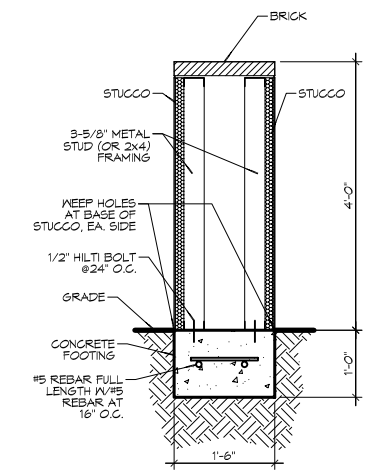

6 FOUNDATION DETAIL
SCALE: 3/4"=1'-0"

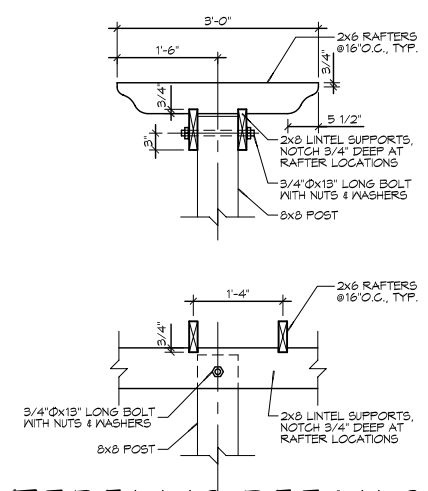

5 TRELLIS DETAILS
SCALE: 3/4"=1'-0"

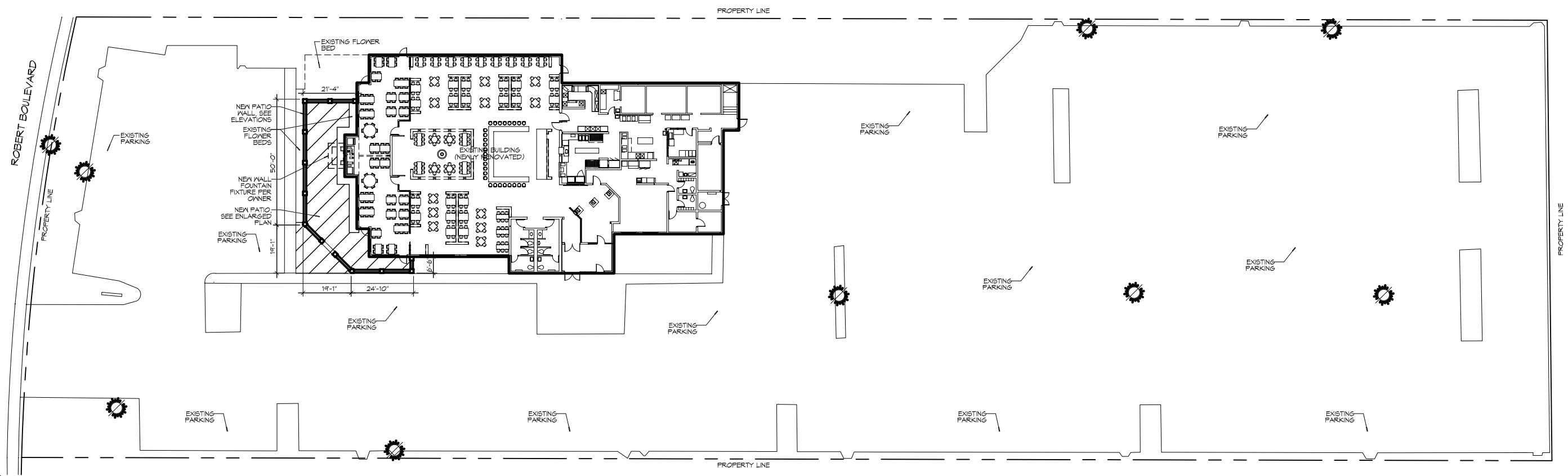

1 SITE PLAN
SCALE: 1"=20'-0"

DAMMON ENGINEERING, INC.
Architects & Engineers
www.dammonengineering.com
info@dammonengineering.com
PH: 985.649.5832
F: 985.641.5950
Chief Architect: Kevin J. Kinchen, NCARB
Chief Engineer: Brian Mistich, PE
554 Old Spanish Trail
Slidell, LA 70458

#	DESCRIPTION	DATE

REVISIONS

SEAL:

BUILDING RENOVATION PROJECT FOR
EPASO RESTAURANT
1120 ROBERT BOULEVARD
SLIDELL, LA 70458

JOB No: 2242 DATE: 05-27-15
DRAWN BY: JTL CHECKED BY: CKD

SHEET TITLE:
SITE PLAN & DETAILS

DRAWING NUMBER:
C101

SHEET No: 00 of #