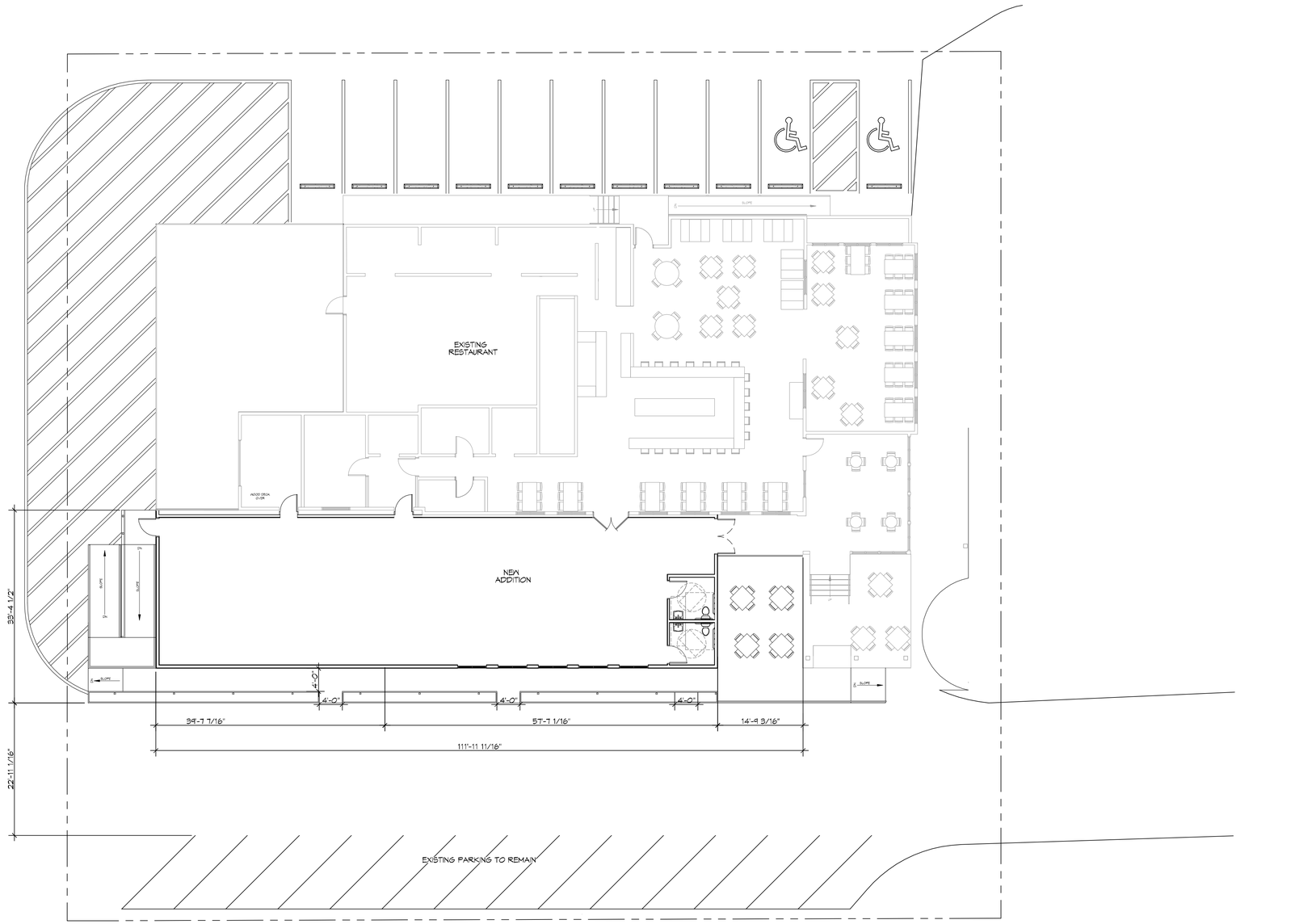

6 SITE PLAN
SCALE: 1" = 10'-0"

DAMMON ENGINEERING, INC.
LOUISIANA & MISSISSIPPI

Chief Engineer: Brian Mistich, PE
554 Old Spanish Trail
Slidell, LA 70458
www.dammonengineering.com
info@dammonengineering.com
PH: 985.649.5832

REVISIONS

#	DESCRIPTION	DATE

SEAL:

Missing or invalid r
File: R:\Stamps\Bri
Sheet: 1

NEW DINING ADDITION
SOUTHSIDE CAFE
3154 PONTCHARTRAIN DR
SLIDELL, LA 70458

JOB No:	2359	DATE:	03-18-2019
DRAWN BY:	CKD	CHECKED BY:	JMS

SHEET TITLE:
SITE PLAN

DRAWING NUMBER:
C101

SHEET No: 3 of 15

WINDOW SCHEDULE					
MK	SIZE (WXH)	FRAME	TYPE	GLAZING	REMARKS
A	59-1/2 X 66	WOOD	FIXED	NONE	CLOSE IN WALL
B	59-1/2 X 66	ALUM	FIXED	TINTED/TEMPERED/DOUBLE ISULATED	RELOCATED EXISTING WINDOW

NOTES:
1. ALL EXTERIOR WINDOW ASSEMBLES TO BE RATED FOR 130 MPH WINDS AND SHALL BE MISSILE IMPACT RESISTANT.

DOOR SCHEDULE						
MK	WIDTH	HEIGHT	DOOR MATERIAL	FRAME MATERIAL	LOCK TYPE	REMARKS
A/04	3'-0"	6'-8"	GLASS	HOLLOW METAL	PUSH PULL	TWO 3'-0" DOORS
A/10	3'-0"	6'-8"	GLASS	HOLLOW METAL	PUSH PULL	TWO 3'-0" DOORS
B/07	3'-0"	6'-8"	WOOD	HOLLOW METAL	PRIVACY	
B/08	3'-0"	6'-8"	WOOD	HOLLOW METAL	PRIVACY	
B/10	3'-0"	6'-8"	HOLLOW METAL	HOLLOW METAL	PUSH PULL	
B/11	3'-0"	6'-8"	WOOD	HOLLOW METAL	PUSH PULL	SWING DOORS

FINISH SCHEDULE					
ROOM	FLOOR	BASE	WALLS	CEILING	NOTES
MENS RESTROOM	SEALED CONCRETE	CERAMIC TILE	CERAMIC TILE	5/8" GWB	SIX FOOT HEIGHT
WOMENS RESTROOM	SEALED CONCRETE	CERAMIC TILE	CERAMIC TILE	5/8" GWB	SIX FOOT HEIGHT
BAR/DINING	SEALED CONCRETE		5/8" GWB	5/8" GWB	
PREP ROOM	SEALED CONCRETE		FRP PANELS	DROP CEILING	

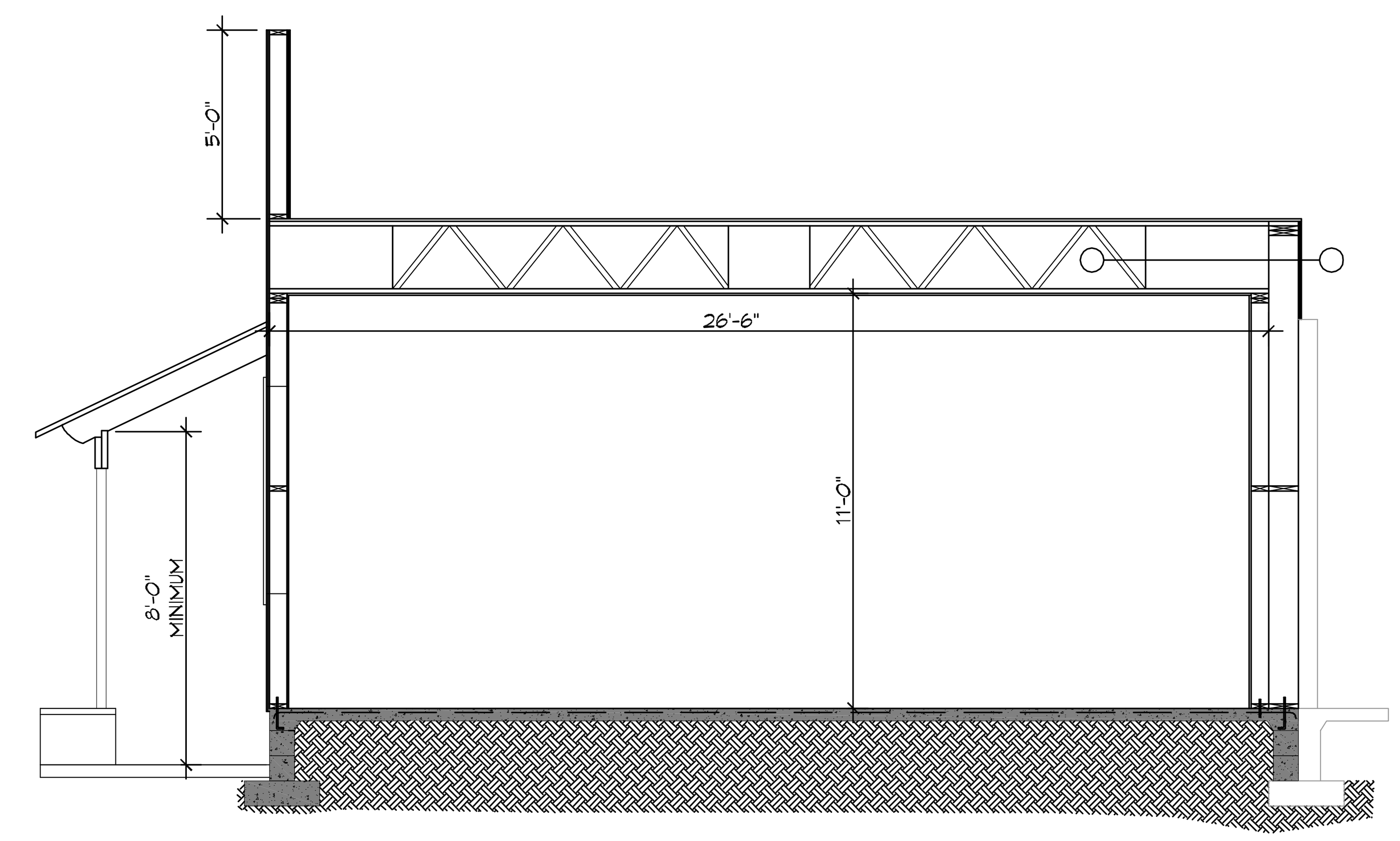

C ADDITION SECTION
SCALE: 1/4"= 1'-0"

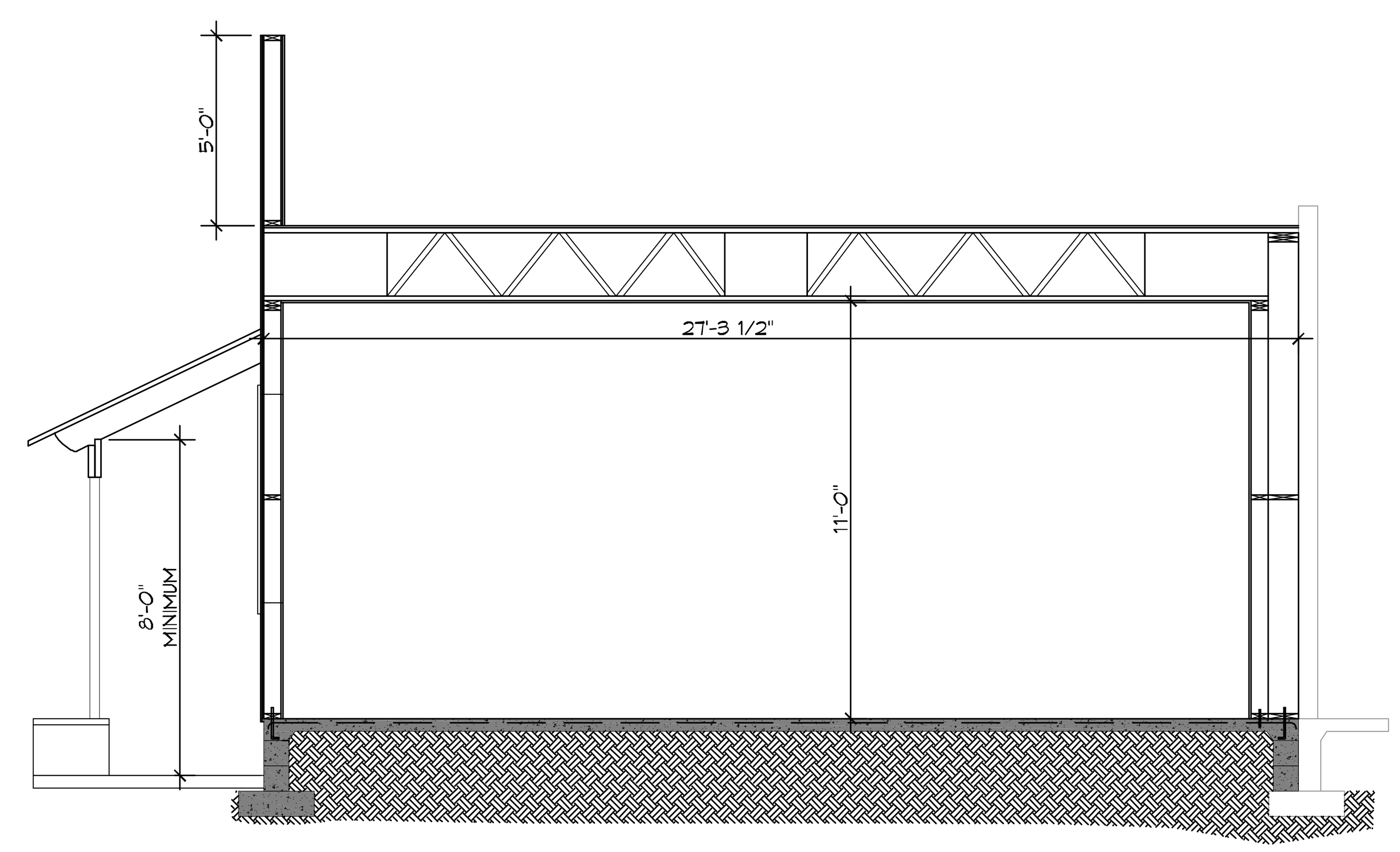

A ADDITION SECTION
SCALE: 1/4"= 1'-0"

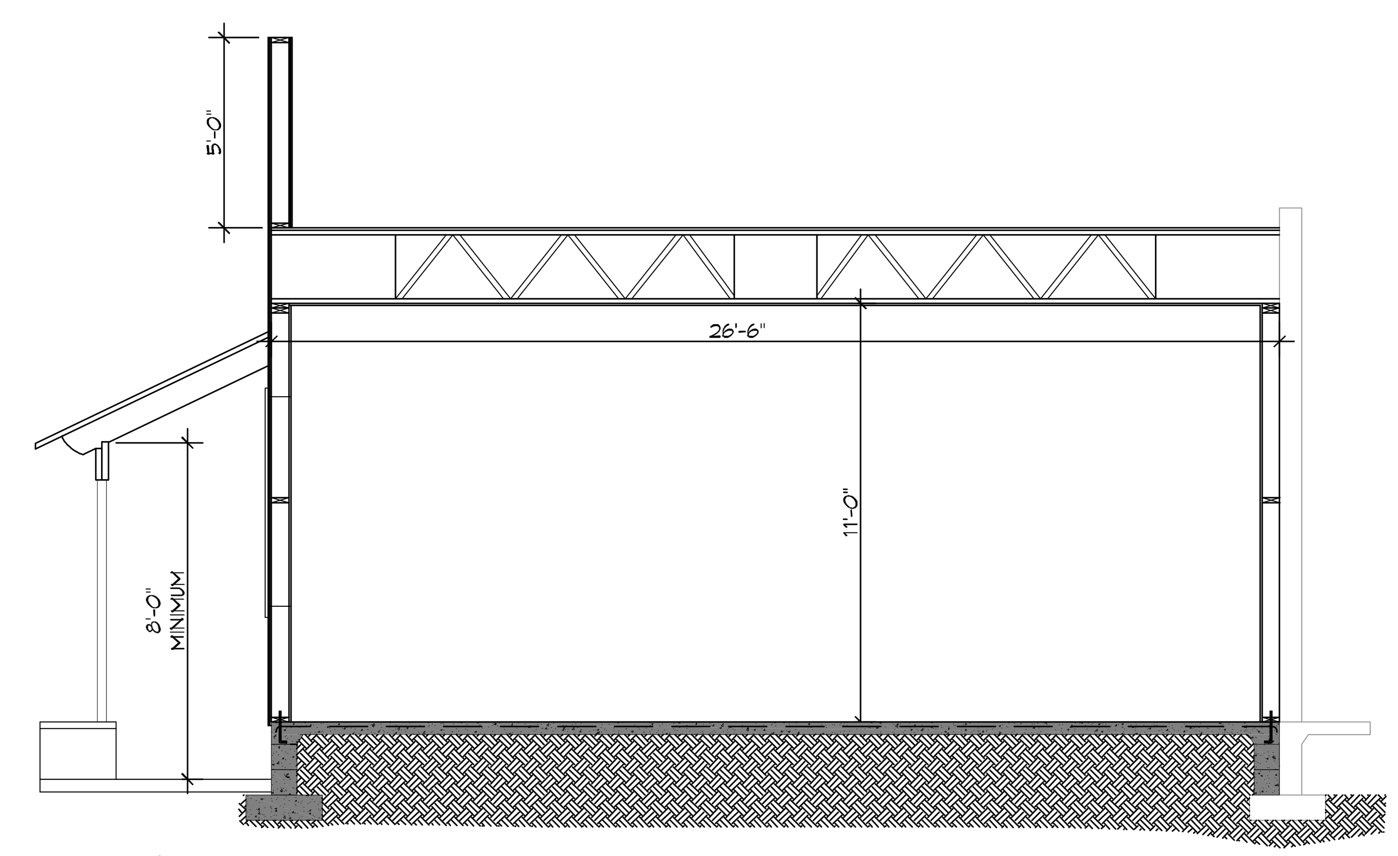

B ADDITION SECTION
SCALE: 1/4"= 1'-0"

DOOR SCHEDULE

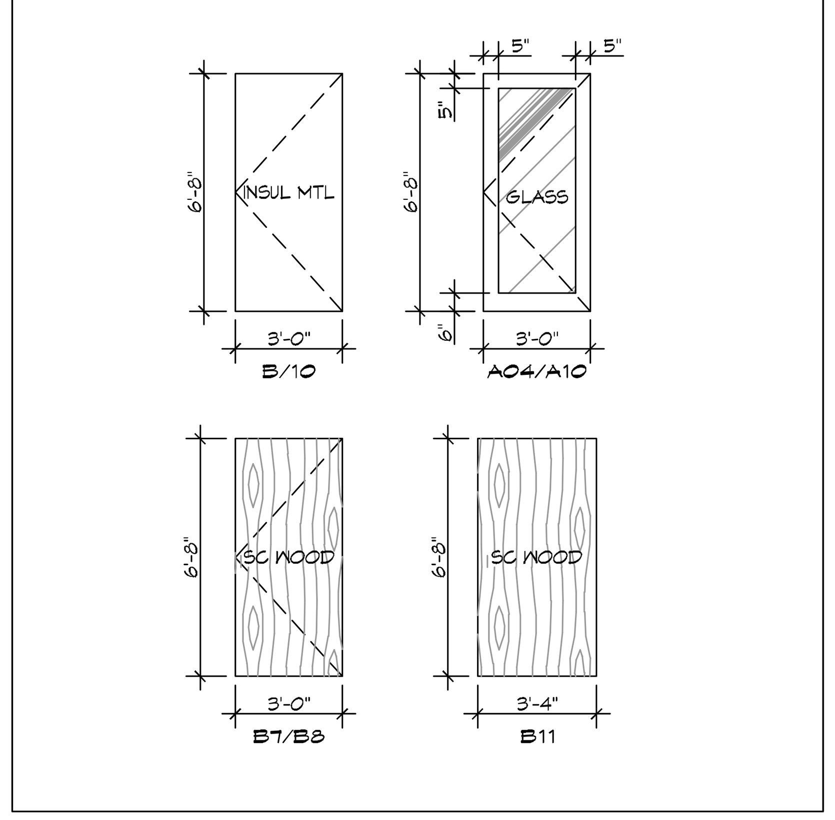

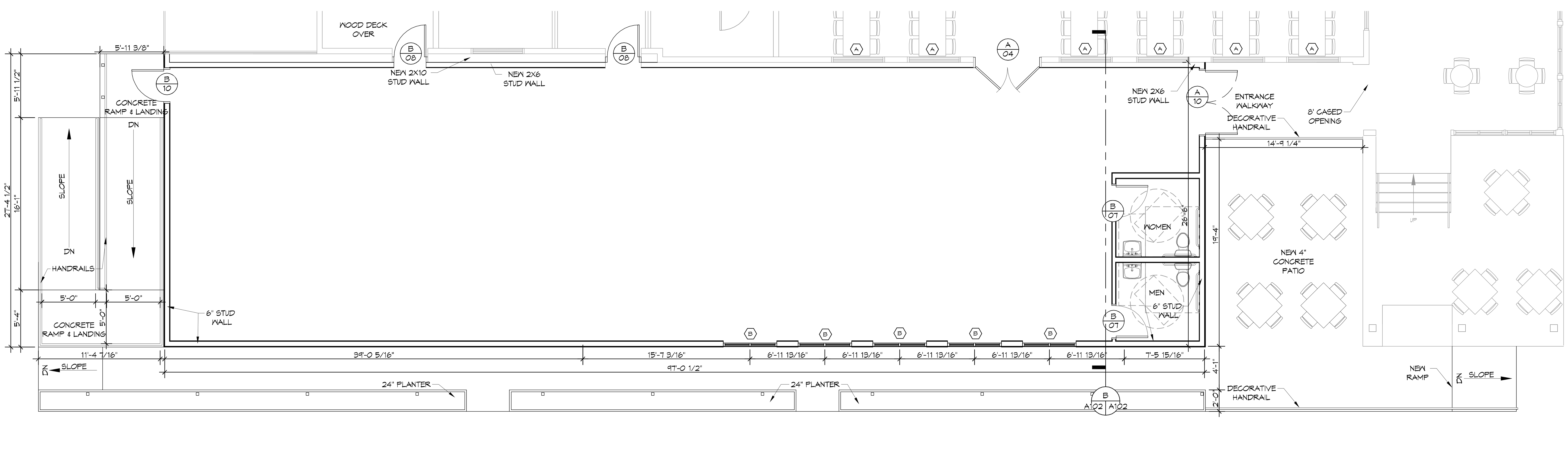

12 NEW DINING FLOOR PLAN
SCALE: 3/16"= 1'-0"

GENERAL NOTES

1. INSULATION AND INSULATION ASSEMBLIES SHALL MEET THE REQUIREMENTS OF IBC 2012 SECTION 719.
   A. CONCEALED INSULATION SHALL HAVE A FLAME SPREAD OF 0-25 AND SMOKE DEVELOPED INDEX OF 0-450. EXCEPT THAT IN COMBUSTIBLE (WOOD FRAME) CONSTRUCTION.
   B. FACING SHALL COMPLY WITH IBC 2012.
2. ALL MATERIALS SHALL BE NEW AND UL LISTED.
3. NO WORK SHALL BE CONCEALED UNTIL APPROVED BY LOCAL INSPECTORS.
4. CONSTRUCTION SHALL COMPLY WITH ALL PARISH, STATE, AND LOCAL CODES.
5. CONTRACTOR TO GUARANTEE WORK FOR ONE YEAR FROM DATE OF SUBSTANTIAL COMPLETION.
6. CONTRACTOR SHALL FURNISH WATER AND POWER FROM EXISTING SOURCES.
7. EXTERIOR CAULKING SHALL BE THIOKAL CAULK.
8. PAINT SHALL BE SHERWIN WILLIAMS OR EQUIVALENT AND APPROPRIATE FOR THE SUBSTRATE TO WHICH IT IS APPLIED AS RECOMMENDED BY PAINT MANUFACTURER. ALL WORK TO RECEIVE THREE COATS (ONE PRIMER COAT, TWO FINISH COATS) UNLESS OTHERWISE RECOMMENDED BY PAINT MANUFACTUER. COLORS TO BE SELECTED BY OWNER.
9. PROVIDE CLEANUP ON A REGULAR BASIS. NO TRASH SHALL BE STORED INSIDE BUILDING PREMISES.
10. ALL BATT INSULATION SHALL HAVE A CLASS "A" (0-25) FLAME SPREAD IN COMPLIANCE WITH IBC 2012.
11. USE 2x6 STUDS, OR TWO 2x4 STAGGERED STUDS WITH 2x6 SILL PLATE AT ALL WALLS WHERE 4" PIPE IS INDICATED. SEE PLUMBING RISER DIAGRAM FOR PIPE SIZE.
12. PROVIDE GALVANIZED METAL PAN WITH DRAIN AT ALL WATER HEATERS.
13. ALL FLOORING SHALL MEET OR EXCEED ADA GUIDELINES REQUIREMENTS FOR SLIP RESISTANCE.
14. INTERIOR LOCKS ON DOORS IN MEANS OF EGRESS SHALL NOT REQUIRE THE USE OF A KEY, SPECIAL KNOWLEDGE, OR SPECIAL DEVICE TO OPEN IN THE DIRECTION OF EGRESS. ALL DOORS SHALL HAVE LEVER TYPE HANDLES.
15. INTERIOR WALLS AND CEILINGS SHALL HAVE A FLAME SPREAD OF 0-200 AND A SMOKE DEVELOPMENT RATING OF 0-450.
16. ALL WORK SHALL COMPLY WITH THE LATEST EDITION OF ALL LOCAL, STATE, AND NATIONAL CODES COVERING THE TYPE OF WORK BEING PERFORMED.
17. PROVIDE PORTABLE FIRE EXTINGUISHERS IN ACCORDANCE WITH NFPA 101. SEE APPENDIX "E" OF NFPA 101 FOR DISTRIBUTION OF EXTINGUISHERS.
18. ALL FIRE WALLS SHALL EXTEND TIGHT TO ROOF DECK AND BE SEALED WITH AN APPROVED FIRE CAULK.
19. ALL ELECTRICAL, MECHANICAL, AND PLUMBING MATERIALS PENETRATING FIRE WALLS SHALL BE FIRE CAULKED. (PENETRATIONS THROUGH RATED CONSTRUCTION SHALL BE SEALED WITH A MATERIAL CAPABLE OF PREVENTING THE PASSAGE OF FLAMES AND HOT GASES WHEN TESTED IN ACCORDANCE WITH ASTM-E814.)
20. SERVICE COUNTERS SHALL HAVE AN ACCESSIBLE WRITING SURFACE IN COMPLIANCE WITH ADAAG ACCESSIBILITY GUIDELINES 2010, SECTION 902.3.

DAMMON ENGINEERING, INC.
LOUISIANA & MISSISSIPPI
Chief Engineer: Brian Mistich, PE
554 Old Spanish Trail
Slidell, LA 70458
www.dammonengineering.com
info@dammonengineering.com
PH: 985.649.5832

#	DESCRIPTION	REVISIONS	DATE

SEAL:

Missing or invalid r
File: R:\Stamps\Br
Sheet: 1

NEW DINING ADDITION
SOUTHSIDE CAFE
3154 PONTCHARTRAIN DR
SLIDELL, LA 70458

JOB No: 2359	DATE: 03-18-2019
DRAWN BY: JAGMW	CHECKED BY: CKD

The above drawings and specifications, designs and arrangements represented thereby are and shall remain the property of Dammon Engineering, and no part thereof shall be copied, disclosed to others, or used in connection with any work or project other than the specific project for which the have been prepared and developed without written consent of Dammon Engineering. Visual contact with these drawings or specifications shall constitute conclusive evidence of acceptance of these restrictions.

SHEET TITLE:
NEW DINING FLOOR PLAN

DRAWING NUMBER:
A102