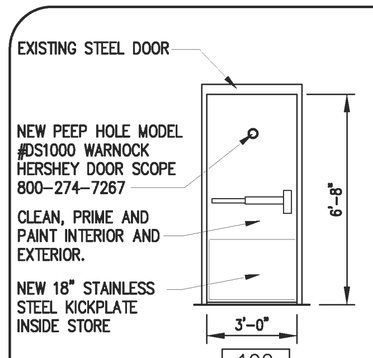

HARDWARE SET "A"

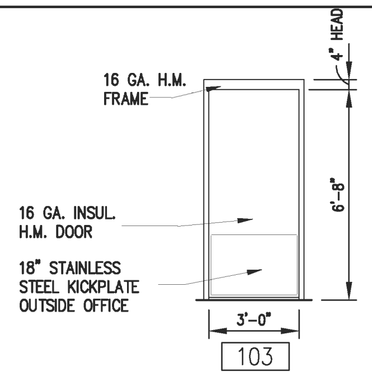

HARDWARE SET "C"

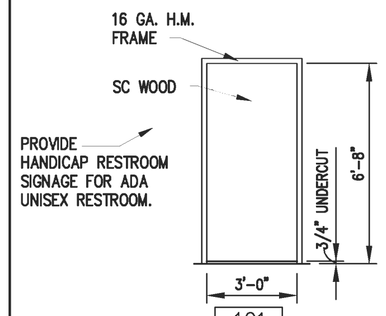

HARDWARE SET "B"

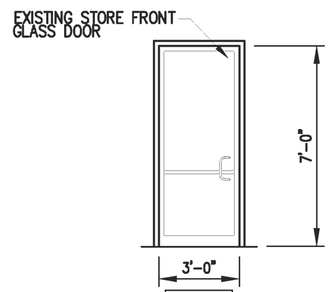

HARDWARE SET "D"

DOOR SCHEDULE 1 / A-1

SCALE: N.T.S.

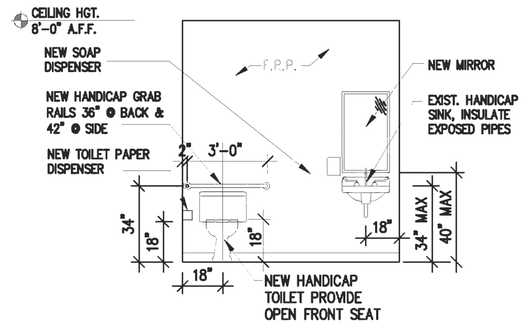

RESTROOM ELEV. 2 / A-1

SCALE: 1/4" = 1'-0"

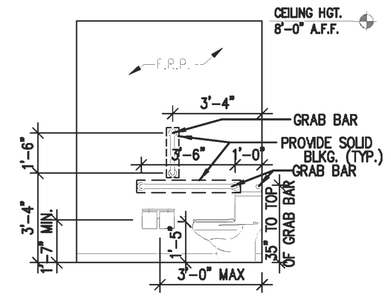

RESTROOM ELEV. 2a / A-1

SCALE: 1/4" = 1'-0"

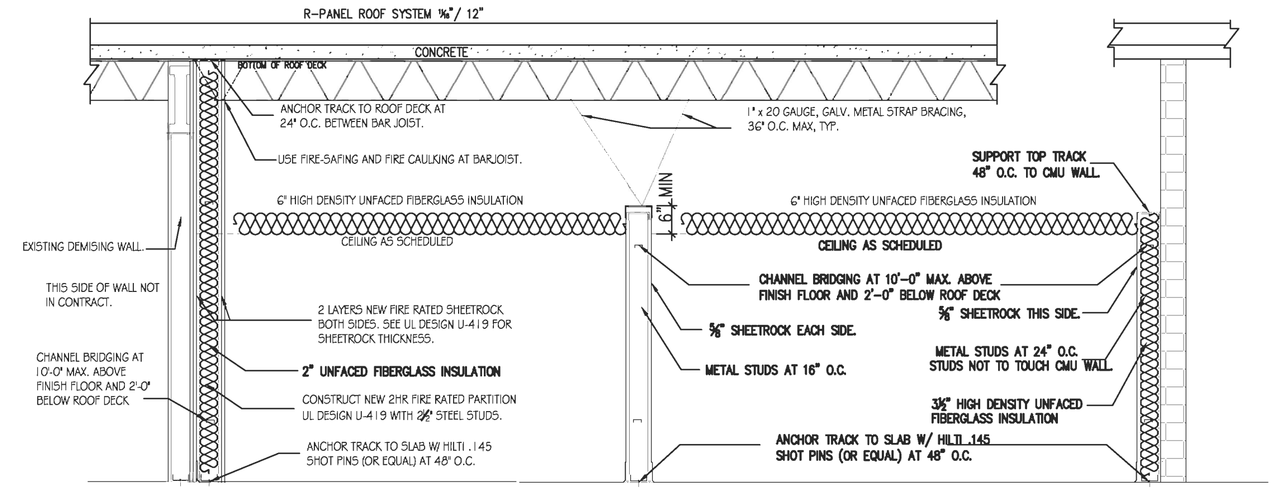

DEMISING WALL (U-419) 6 / A-1

SCALE: N.T.S.

INTERIOR WALL 7 / A-1

SCALE: N.T.S.

REAR WALL 8 / A-1

SCALE: N.T.S.

HARDWARE SCHEDULE

SET "A"

MARK :	REAR DOOR		EXISTING		
CURRIES	1	FRAME	3070 "M" SERIES	16 GA. KNOCKDOWN	
CURRIES	1	DOOR	3070 707S SERIES	FLUSH	20GA. W/ TOP CAP
HAGER	3	HINGES	BB1279 NRP	40"X40"	26D
MONARCH	1	EXIT DEVICE	19-R-L-CONTROL X DANE X 560	MAL./32D	
SCHLAGE	1	MORTISE CYLINDER	20-001	"C" SECTION	26D
NORTAN	1	CLOSER	CLP8501BF		ALUM
HAGER	1	DOOR SWEEP	756SAV	36"	ALUM
HAGER	1	THRESHOLD	412SA	36"	ALUM
HAGER	1	WEATHERSTRIP	726S	17"	CHARCOAL
HAGER	1	RAINDRIP	810SA	40"	ALUM
PRECISION	1	LOCK GUARD	1627		PRIME PAINT

SET "B"

MARK :	RESTROOM DOOR		3068 F	WOOD X HM	
CURRIES	1	FRAME	3068 "C" SERIES	16 GA.	KNOCKDOWN
	1	DOOR	3068 SOLID PARTICLEBOARD CORE		FLUSH
HAGER	3	HINGES	BB1279		26D
SCHLAGE	1	PRIVACY SET	AL40SrSATURN-2		26D
NORTAN	1	CLOSER	8501BF		ALUM
HAGER	1	STOP	WALL - 236W OR FLOOR - 241F		26D

SET "C"

MARK :	OFFICE DOOR		3068 F	WOOD X HM	
CURRIES	1	FRAME	3068 "C" SERIES	16 GA.	KNOCKDOWN
	1	DOOR	3068 SOLID PARTICLEBOARD CORE		FLUSH
HAGER	3	HINGES	BB1279 NRP		26D
1 MORTISE T-TURN CYLINDER LOCKSET ON ACTIVE LEAF					
SCHLAGE	1	MORTISE CYLINDER	20-001	"C" SECTION	26D
NORTAN	1	CLOSER	CLP8501BF		ALUM
HAGER	1	DOOR SWEEP	756SAV	36"	ALUM
HAGER	1	STOP	WALL - 236W OR FLOOR - 241F		26D

SET "D"

MARK :	FRONT DOOR	PAIR (OR SINGLE) 3068 FG	ALUM X ALUM 1¾"
SCHLAGE	1	MORTISE CYLINDER 20-001	10"XCYL. RING
		FINISH TO MATCH ALUMINUM DOORS.	

BALANCE BY DOOR SUPPLIER TO INCLUDE

HINGES/PIVOTS	CLOSERS	
1 PR. FLUSH BOLTS	PUSH/PULLS	THRESHOLD
1 MORTISE T-TURN CYLINDER LOCKSET ON ACTIVE LEAF		
WEATHER STRIP DOOR BOTTOM		

NOTE :

ALL HARD WARE TO MEET LOCAL AND A.D.A. CODES. ALL HARDWARE TO BE LEVER TYPE ON ALL DOORS. ALL EXIT DOORS TO BE INTERIOR LATCH TYPE THAT OPEN WITHOUT A KEY OR ANY SPECIAL KNOWLEDGE.

PROVIDE TWO CHANGE KEYS PER LOCK/CYL. AND 3 MASTER KEYS

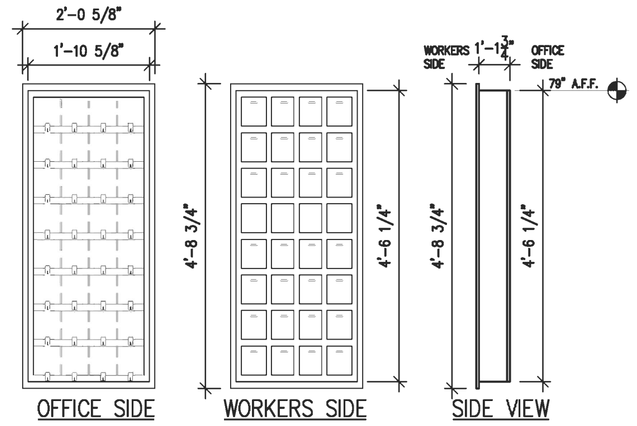

DRIVER'S DROP BOX HOLDER 3 / A-1

SCALE: N.T.S.

OFFICE SIDE IS MDF FACE AND DOORS.
WORKERS SIDE IS PARTICLE BOARD ALL WHITE MELAMINE INTERIOR. FORMICA "YELLOW" METAL CRAFT

ROUGH OPENING FOR 20 SLOT DROP BOX IS 22½" WIDE X 34½" HIGH. 40" A.F.F.

ROUGH OPENING FOR 32 SLOT DROP BOX IS 22½" WIDE X 54½" HIGH.

VERIFY WITH OWNER DROP BOX SIZE.

NOTE: ALL WALLS TO BE REMOVED SHOWN DASHED | NOTE: EXISTING WALL TO REMAIN | EXISTING CMU WALL TO REMAIN | NOTE: NEW WALLS SHOWN SHADED | 2 HOUR RATED PARTITION WALL.

CONTRACTOR TO VERIFY ALL DIMENSIONS AND CONDITIONS, PRIOR TO ERECTING WALLS AND STARTING CONSTRUCTION.

EQUIPMENT REQUIRED FOR SAFE INSTALLATION :

1. 4ea. 6" MOLLY PARABOLT
2. 0" DRILL MOTOR
3. 0" CARBIDE BIT
4. HAMMER
5. 0" WRENCH OR SOCKET & DRIVER
6. LIQUID ROCK (1 pkg.)
7. SAFETY GOGGLES

INSTALLATION INSTRUCTIONS :

1. POSITION SAFE IN PLACE WHERE IT IS GOING TO BE INSTALLED.
2. TRACE THE HOLES ON THE BOTTOM OF THE SAFE ONTO THE FLOORSURFACE BELOW.
3. REMOVE SAFE.
4. DRILL THE HOLES W/ THE 0" CARBIDE BIT, HOLES MUST BE AT LEAST 40" DEEP.
5. CLEAN THE HOLES OF DEBRIS, MIX & POUR LIQUID ROCK INTO EA. HOLE.
6. INSERT STAINLESS STEEL RAISED PLATFORM.
7. POSITION SAFE BACK INTO PLACE.
8. ADD WASHER & THREAD NUT FLUSH W/ THE TOP OF THE BOLT (SEE DET. #1)
9. DRIVE BOLT THROUGH THE HOLE IN THE SAFE.
10. TO SET THE FASTENERS, TIGHTEN THE NUT THREE (3) FULL TURNS W/ 0" WRENCH OR SOCKET (SEE DET. #2)

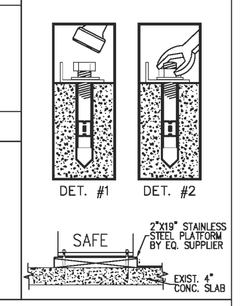

GENERAL NOTES:

1. CONTRACTOR TO VERIFY ALL SITE CONDITIONS AND ALL DIMENSIONS PRIOR TO CONSTRUCTION. ALL WORK SHALL CONFORM TO ALL LOCAL AND STATE CODES AND REGULATIONS.
2. GENERAL CONTRACTOR SHALL INSTALL ALL REQUIRED BLOCKING FOR ALL EQUIPMENT, HANGERS, ETC.
3. INSULATION AND INSULATION ASSEMBLIES SHALL MEET THE REQUIREMENTS OF SECTION 719, INTERNATIONAL BUILDING CODE, 2009.
   A. CONCEALED INSULATION SHALL HAVE A FLAME SPREAD OF NOT MORE THAN 25 AND A SMOKE DEVELOPED INDEX OF NOT MORE THAN 450.
   B. FACING SHALL COMPLY WITH IBC 719.2.1.
4. DIMENSIONS ARE TO CENTER LINE OR FACE OF STUDS, CENTER LINES OF COLUMNS.
5. CONTRACTOR TO VERIFY ALL SITE CONDITIONS AND ALL DIMENSIONS PRIOR TO CONSTRUCTION.
6. MATERIALS SHALL BE NEW AND U.L. LISTED.
7. NO WORK SHALL BE CONCEALED UNTIL APPROVED BY LOCAL INSPECTORS.
8. CONSTRUCTION SHALL COMPLY WITH ALL CITY, STATE AND LOCAL CODES.
9. CONTRACTOR TO GUARANTEE WORK FOR ONE YEAR.
10. CONTRACTOR SHALL FURNISH WATER FROM EXISTING SOURCES. CONTRACTOR SHALL SUPPLY GENERATOR POWER UNTIL THE BUILDING ELECTRICAL SERVICE IS UPGRADED.
11. PAINT GRADE TO BE SHERWIN-WILLIAMS OR EQUIVALENT. ALL WORK TO RECEIVE 2 COATS.
12. PROVIDE CLEANUP ON A REGULAR BASIS. NO TRASH STORED IN BUILDING.
13. ALL BATT INSULATION SHALL HAVE A CLASS "A" (0-25) FLAME SPREAD IN COMPLIANCE WITH APPLICABLE CODE.
14. USE 6" STUDS AT ALL PLUMBING WALLS.
15. PROVIDE GALV. METAL PAN WITH DRAIN AT WATER HEATER LOCATION.
16. LOCKS ON DOORS IN MEANS OF EGRESS SHALL NOT REQUIRE THE USE OF A KEY (INTERIOR SIDE), SPECIAL DEVICE OR SPECIAL KNOWLEDGE TO OPEN IN THE DIRECTION OF EGRESS. ALL DOORS SHALL HAVE LEVER TYPE HANDLES.
17. INTERIOR WALLS AND CEILINGS SHALL HAVE A FLAME SPREAD OF 0-25 AND A SMOKE DEVELOPMENT RATING OF 0-450.
18. ALL WORK SHALL COMPLY WITH THE LATEST EDITION OF ALL LOCAL, STATE AND NATIONAL CODES THAT COVER THE SECTION OF WORK BEING PERFORMED.
19. PROVIDE PORTABLE FIRE EXTINGUISHERS IN ACCORDANCE WITH NFPA 10. SEE APPENDIX "E" OF NFPA 10 FOR DISTRIBUTION OF EXTINGUISHERS.
20. GENERAL CONTRACTOR TO INSTALL PLYWOOD BACKING BEHIND ALL SHELVING AND SINKS AS NEEDED TO SUPPORT SUCH ITEMS.
21. GENERAL CONTRACTOR TO RUN EXTERIOR EXPOSED PHONE LINE THRU STEEL CONDUIT.
22. GENERAL CONTRACTOR SHALL FURNISH AND INSTALL THE FOLLOWING BATH ACCESSORIES: BY BORICK 800-853-4331 = SHAWN STONE
    NOTE: PROVIDE IN WALL WD. BLOCKIG AS REQ.'D TO MOUNT RESTROOM ACCESSORIES.
    A. PAPER TOWEL DISPENSER = BOBRICK B-262 - MOUNT @ 46" A.F.F. TO BOTT OF DISP.
    B. LIQUID SOAP DISPENSER = BOBRICK B-4112
    C. TOILET PAPER HOLDER = BOBRICK B-2740 - MOUNT @ 19" A.F.F. TO CENTER
    D. 18"X30" STAINLESS STL FRAMED MIRROR = BOBRICK B-145 - MOUNT @ 40" A.F.F. MAX REFL SURF
    E. DOOR MOUNTED ROBE HOOK
    F. WALL MOUNTED GRAB BAR = BOBROCK B-6106 36" & 48" - MOUNT @ 34" A.F.F.
    G. HANDICAP RESTROOM REQ'D. EQUIPMENT PER LOCAL CODES
23. ALL FIRE PARTITIONS SHALL EXTEND TIGHT TO ROOF SHEATHING & SEALED WITH APPROVED FIRE CAULK. CONTRACTOR TO VERIFY.
24. ALL ELECTRICAL, MECHANICAL & PLUMBING PENETRATING FIRE PARTITIONS SHALL BE FIRE CAULKED. (PENETRATIONS THROUGH RATED CONSTRUCTION SHALL BE SEALED WITH A MATERIAL CAPABLE OF PREVENTING THE PASSAGE OF FLAMES AND HOT GASES WHEN TESTED IN ACCORDANCE WITH ASTM-E814.)

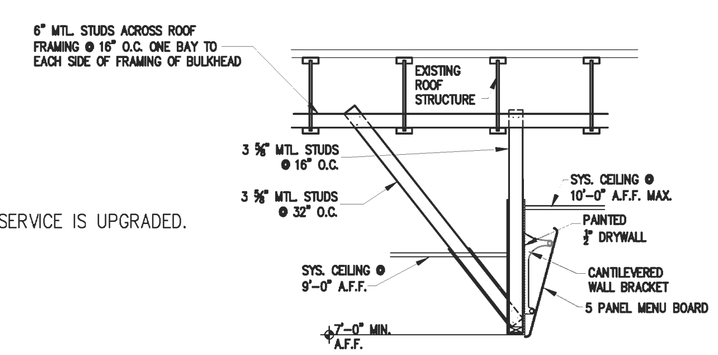

BULKHEAD DETAIL 4 / A-1

NOT TO SCALE

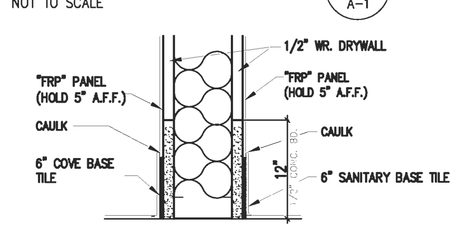

BASE TILE DETAIL 5 / A-1

SCALE: N.T.S.

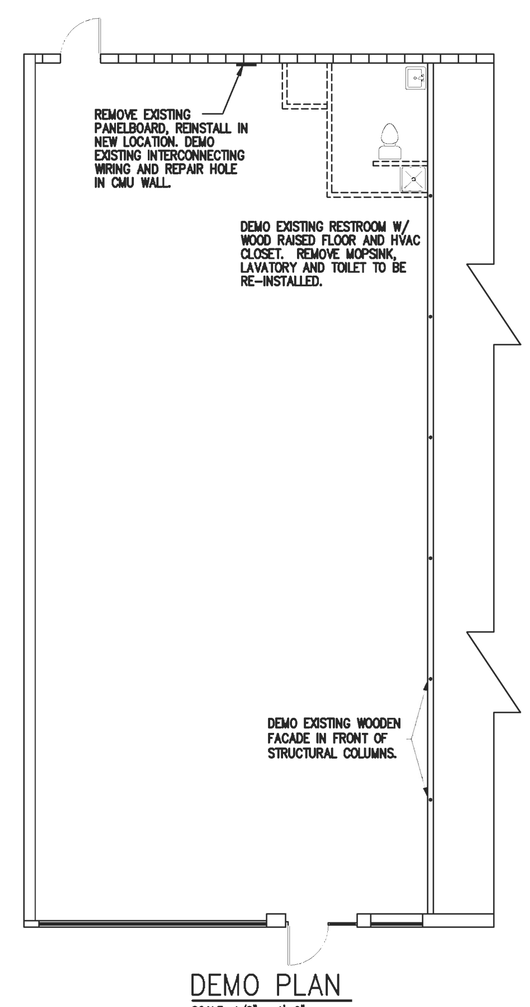

DEMO PLAN

SCALE: 1/8" = 1'-0"

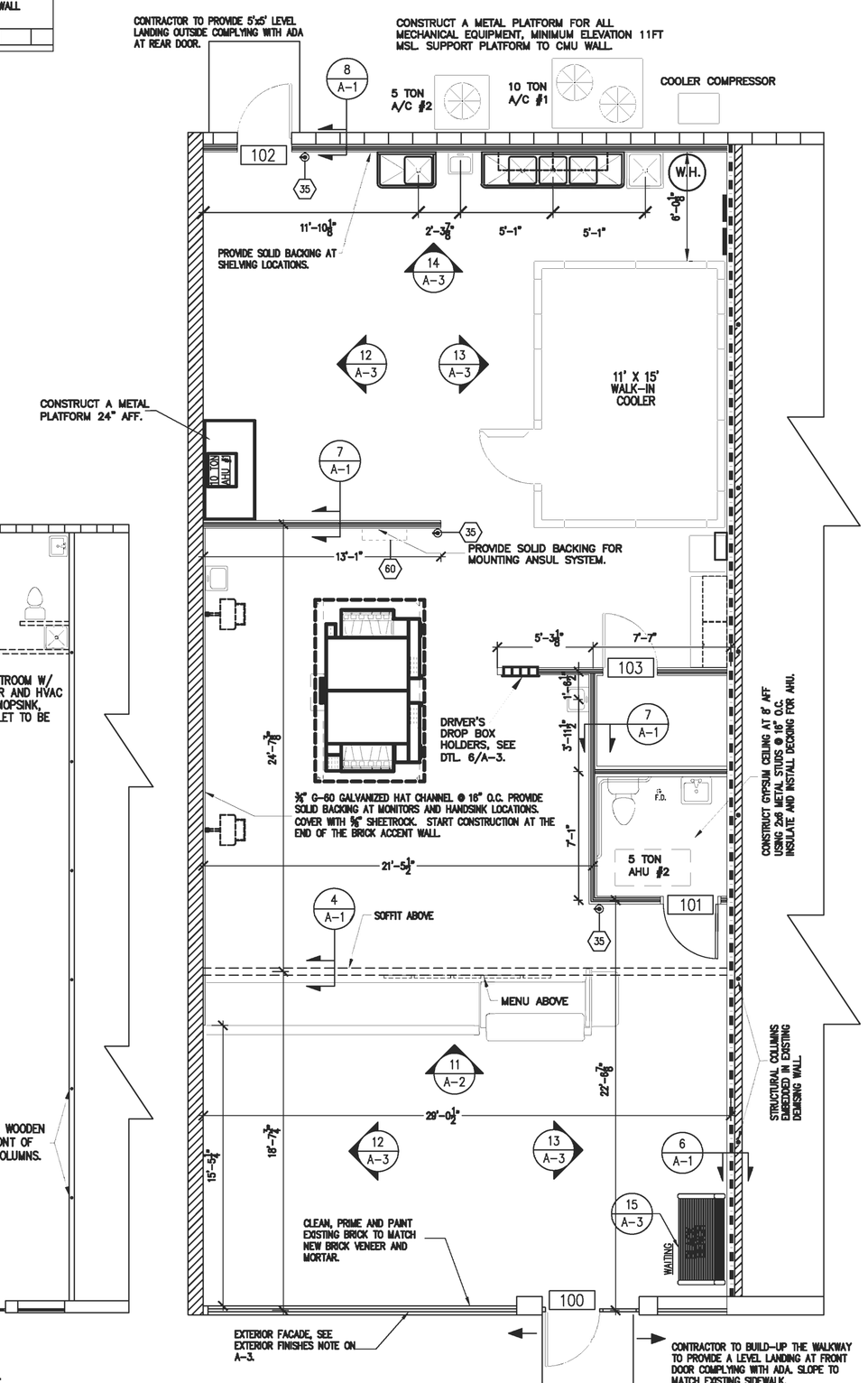

FLOOR PLAN

SCALE: 3/16" = 1'-0"

DAMMON ENGINEERING, INC.

CHIEF ENGINEER
EMMETT DAMMON, P.E.

CHIEF ARCHITECT
ROBERT WILTSE

554 OLD SPANISH TRAIL
SLIDELL, LA. 70458
OFFICE: 985-649-5832
FAX: 985-641-5950

WEBSITE:
WWW.DAMMONENGINEERING.COM

EMAIL:
DAMMONENG@BELLSOUTH.NET

ARCHITECTURE
ENGINEERING
STUDIES
PLANNING
INVESTIGATION
EXPERT WITNESS

PAPA JOHN'S PIZZA TENANT BUILDOUT

3013 PONTCHARTRAIN DR.
SLIDELL
LOUISIANA
70458

FLOOR PLAN

REV:

SCALE: AS NOTED
JOB#: 2119
DATE: 8/12/2011
SHEET 2

A-1

OF 10