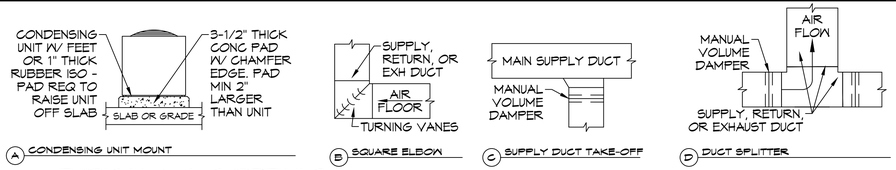

(A) CONDENSING UNIT MOUNT (B) SQUARE ELBOW (C) SUPPLY DUCT TAKE-OFF (D) DUCT SPLITTER

TYPICAL HVAC DETAILS
SCALE: NTS

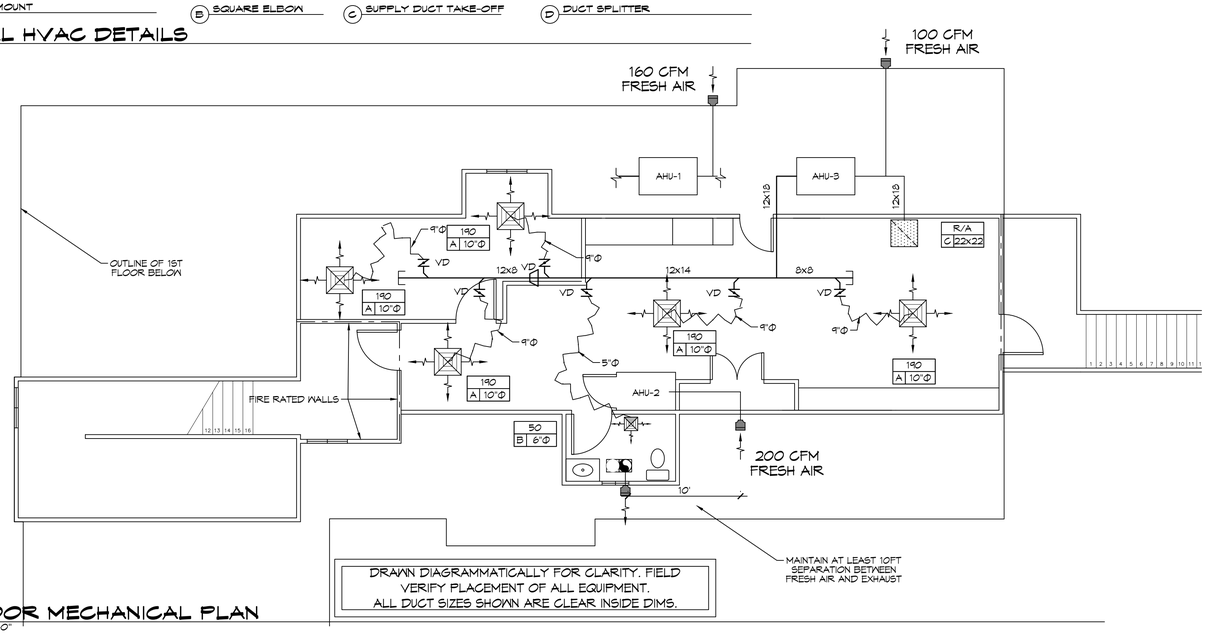

DRAWN DIAGRAMMATICALLY FOR CLARITY. FIELD VERIFY PLACEMENT OF ALL EQUIPMENT. ALL DUCT SIZES SHOWN ARE CLEAR INSIDE DIMS.

2nd FLOOR MECHANICAL PLAN
SCALE: 3/16" = 1'-0"

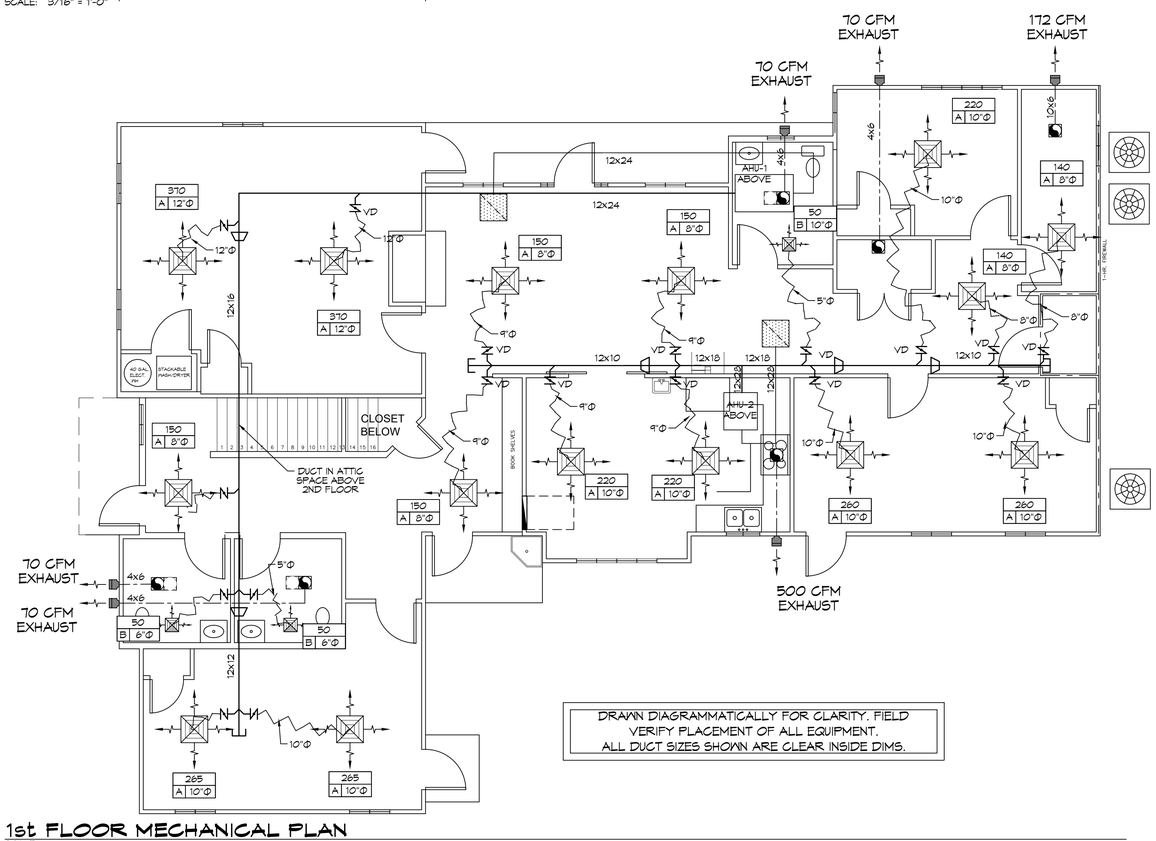

DRAWN DIAGRAMMATICALLY FOR CLARITY. FIELD VERIFY PLACEMENT OF ALL EQUIPMENT. ALL DUCT SIZES SHOWN ARE CLEAR INSIDE DIMS.

1st FLOOR MECHANICAL PLAN
SCALE: 3/16" = 1'-0"

1 MECHANICAL PLAN
SCALE: 3/16" = 1'-0"

FRESH AIR CALCULATIONS

IMC 2021 Tbl 403.3.1.1
Large ClassRoom; age 9 +

Voz = RpPz + Ra Az
Rp = 10
Pz = 35 per 1000 ft2 = 13.4 people
Ra = 0.12
Az = 404.0 ft2 - 5 % for furniture = 383.80 ft2

Voz = 180.39 cfm fresh air per classroom

********** **********

Small Classrooms; age 9 +
Voz = RpPz + Ra Az
Rp = 10
Pz = 35 per 1000 ft2 = 10.0 people
Ra = 0.12
Az = 300.00 ft2 - 5 % = 285.00 ft2

Voz = 134.0 cfm fresh air per small classroom

********** **********

ALL 3 CLASSROOMS TOGETHER REQUIRE
180 cfm + (134.0 cfm x 2) = 448 cfm FRESH AIR

********** **********
********** **********

Down Stair Office
Voz = RpPz + Ra Az
Rp = 5
Pz = 5 per 1000 ft2 = 0.6 people
Ra = 0.06
Az = 133.00 ft2 - 5 % = 126.35 ft2

Voz = 10.7 cfm
********** **********

DOWN STAIR CORRIDORS
VBZ = RpPz + Ra Az
Rp = 5
Pz = 5 PER 1000 FT2 = 3.9 PEOPLE
Ra = 0.06
Az = 813.00 FT2 - 5 % = 772.35 FT2

VBZ = 65.6 cfm

********** **********
********** **********

DOWN STAIRS TOTAL FRESH AIR REQUIRED = 448 + 11 + 66 = 525 cfm
AHU-1 PROVIDES 160 cfm AND AHU-2 PROVIDES 200 cfm THE REMAINDER = 165 cfm; COMES IN THRU INFILTRATION OF THE BUILDING AND EXTERIOR DOOR OPENING THROUGH OUT THE DAY.

SPLIT SYSTEMS SCHEDULE

TAG	MAKE/MODEL	NOMINAL TONS	TOTAL CFM	OA CFM	COOLING TOTAL MBH	HEATING KW	POWER
CU-1/AHU-1	TRANE 4TTR/TEM6	4.0	1,600	160	48,000	9.6	240/1/60
CU-2/AHU-2	TRANE 4TTR/TEM6	5.0	2,000	200	60,000	9.6	240/1/60
CU-3/AHU-3	TRANE 4TTR/TEM6	2.5	1,000	100	30,000	7.68	240/1/60

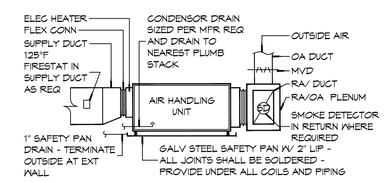

(G) TYPICAL HORIZONTAL AHU

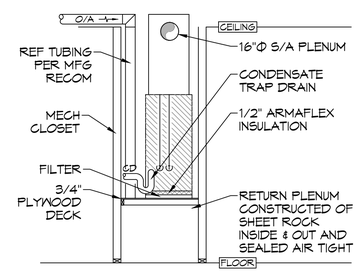

(F) TYPICAL VERTICAL AHU

DRAWN DIAGRAMMATICALLY FOR CLARITY. FIELD VERIFY PLACEMENT OF ALL EQUIPMENT

MECHANICAL LEGEND

- SUPPLY AIR GRILLE
- RETURN AIR GRILLE
- DAMPER CONTROL
- SUPPLY DUCT
- RETURN AIR DUCT
- EXHAUST DUCT
- EXHAUST FAN
- THERMOSTAT

GENERAL NOTES

1. ALL WORK AND MATERIAL SHALL CONFORM STRICTLY TO THE LATEST LOCAL CITY, PARISH, STATE AND NATIONAL GOVERNING CODES. MUST MEET IMC 2021 REQUIREMENTS.
2. CONCEALED RECTANGULAR DUCTWORK IS TO BE FABRICATED WITH INSULATED FIBERGLASS DUCT BOARD IN ACCORDANCE WITH SMACNA FIBROUS GLASS DUCT CONSTRUCTION STANDARDS. DUCT BOARD IS TO BE 1" THICK (MINIMUM), RATED FOR A 2" WG DUCT PRESSURE AND FURNISHED WITH A THERMAL RESISTANCE R VALUE OF 4.3 HR*FT*FT2/BTU (MINIMUM). DUCT BOARD SHALL BE UL 181,CLASS 1 RATED AND NFPA 90A/90B COMPLIANT. ALL JOINTS SHALL BE TAPED AND SEALED WITH UL-181 FOIL TAPE.
3. ROUND FLEXIBLE DUCT SHALL BE INSULATED, UL-181, CLASS 1 RATED IN ACCORDANCE WITH NFPA 90A/90B. INSULATION R-VALUE NOT LESS THAN 4.2.
4. ALL DUCT SIZES SHOWN ARE CLEAR INSIDE DIMENSIONS.
5. IN ALL SYSTEMS OVER 2000 CFM AND LESS THAN 15,000 CFM, SMOKE DETECTORS SHALL BE INSTALLED IN ACCORDANCE WITH NFPA 72E IN THE RETURN DUCT DOWNSTREAM OF THE AIR HANDLING UNIT AND ALL FILTERS TO AUTOMATICALLY STOP THE FAN.
6. PROVIDE UL LISTED 125 'F' FIRESTAT IN RETURN AIR OF EACH SYSTEM UNDER 2000 CFM TO SHUT DOWN THE FAN IN THE EVENT OF FIRE.
7. PROVIDE UL RATED FIRE DAMPERS WHERE REQUIRED AT ALL DUCT PENETRATIONS OF FIRE-RATED ASSEMBLIES AND WHERE REQUIRED BY CODE, INCLUDING OUTSIDE AIR INTAKES AND EXHAUST FANS.
8. CONDENSATE DRAINS TO BE PVC PIPE RUN TO PLUMBERS P-TRAP WITHIN FIVE FEET OF AIR HANDLING UNITS.
9. ALL AIR HANDLING SYSTEMS TO BE BALANCED TO ASSURE PROPER AIR FLOWS PER PLANS.
10. ALL THERMOSTATS TO BE AUTOMATIC CHANGEOVER WITH HEAT SWITCH.
11. EXHAUST FAN SHALL BE CONTROLLED BY A SWITCH ON THE WALL IN THE SAME LOCATION AS LIGHT SWITCH(S). PROVIDE BACK DRAFT DAMPER.
12. PROVIDE AND INSTALL WATER PROOF GRILLE VENT IN PROPER ROOF LOCATION FOR PLUMBING FIXTURE EXHAUST.
13. ALL SUPPLY AIR VENTS SHALL BE EQUIPPED WITH AIR CONTROL DAMPERS AT THE REGISTER.
14. LOCATE OUTDOOR UNITS AS SHOWN ON ARCHITECTURAL DRAWINGS.
15. REFRIGERANT LINES SHALL BE SIZED BY UNIT MANUFACTURER AND INSTALLED ACCORDING TO MANUFACTURER'S INSTRUCTIONS.
16. FRESH AIR SHALL BE SUPPLIED TO EACH AIR HANDLER THROUGH EXTERIOR WALL DUCT SUPPLIED WITH A CONTROL DAMPER.
17. ALL ELECTRICAL, MECHANICAL, AND PLUMBING PENETRATING FIRE WALLS SHALL BE FIRE CAULKED. (PENETRATIONS THROUGH RATED CONSTRUCTION SHALL BE SEALED WITH A MATERIAL CAPABLE OF PREVENTING THE PASSAGE OF FLAMES AND HOT GASES WHEN TESTED IN ACCORDANCE WITH ASTM-E8-14).
18. ALL MECHANICAL SYMBOLS ARE DRAWN DIAGRAMMATICALLY, CONTRACTOR TO VERIFY WITH OWNER LOCATIONS OF VENTS, DAMPERS, REGISTERS, ETC.
19. SUPPORT ALL FLEX DUCT TO PREVENT SAGGING
20. REFER TO REFLECTED CEILING PLAN FOR FINAL GRILLE AND DIFFUSER LOCATIONS AND COORDINATE AS REQUIRED.
21. FINAL LOCATION OF TEMPERATURE CONTROLS TO BE COORDINATED WITH OWNER AT JOB SITE.
22. PROVIDE AND INSTALL SMOKE DETECTORS AS APPROVED BY LOCAL AHJS. PLACE NEAR R/A AND S/A OPENINGS OF AHU AND PROVIDE, WITH ACCESS PANEL, WIRING BY ELECTRICAL CONTRACTOR.
23. FRESH AIR INTAKES ARE REQUIRED TO HAVE MOTORIZED OR GRAVITY DAMPERS TO SHUT OFF WHEN SYSTEM IS NOT RUNNING.
24. PROVIDE BIRD SCREENS AT ALL EXTERIOR MECHANICAL PENETRATIONS.
25. COORDINATE WALL MOUNTED THERMOSTAT LOCATIONS WITH ALL OWNER FURNISHED ITEMS EITHER WALL MOUNTED OR FLOOR MOUNTED AGAINST PARTITIONS. REFER TO ARCHITECTURAL DRAWINGS.
26. SEE ROOF PLAN FOR ALL ROOF PENETRATIONS.
27. PROVIDE MIN 18 GA GALVANIZED SHEET METAL TO BLANK-OFF GABLE VENTS WHERE INTAKE/EXHAUST DUCTS OCCUR.

DAMMON ENGINEERING, INC.
LOUISIANA & MISSISSIPPI
www.dammoneng.com
info@dammoneng.com
PH: 985.649.5832
Chief Engineer: Brian Mistich, PE
5541 O'Neal Lane Trail
Slidell, LA 70458

#	DESCRIPTION	REVISIONS	DATE

SEAL:

RENOVATION FOR 5TH THROUGH 12TH GRADES
BRIGHTHOUSE LEARNING ACADEMY
21464 CLEAR CREEK DR
ABITA SPRINGS, LA

JOB No:	24-75	DATE:	9/4/18
DRAWN BY:	TT	CHECKED BY:	DPD

This work is delivered under Dammon Engineering's professional services agreement and shall remain the property of Dammon Engineering, and no copies thereof shall be retained by anyone other than Dammon Engineering. Any re-use of this work without written consent of Dammon Engineering is prohibited. Any alterations made to this work by others other than those parties who are licensed and authorized professional engineers under Dammon Engineering's seal and signature, shall be deemed to be null and void.

SHEET TITLE:
MECHANICAL PLAN

DRAWING NUMBER:
M101

SHEET No: of #