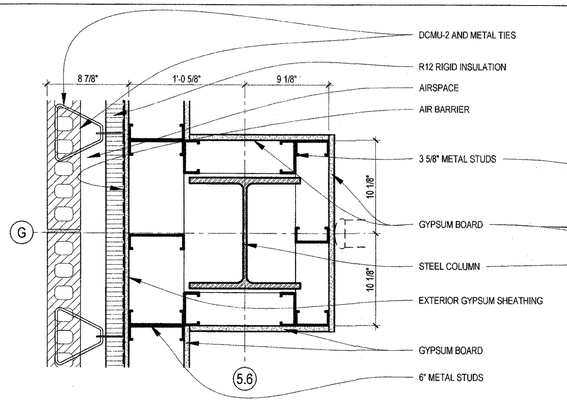

1 DETAIL
A5.06 SCALE: 1 1/2" = 1'-0"

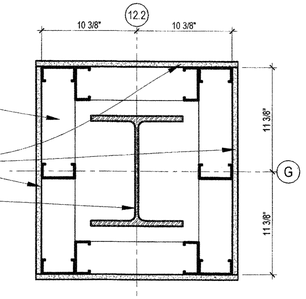

2 DETAIL
A5.06 SCALE: 1 1/2" = 1'-0"

NOTES:
1. SEE DOOR & WINDOW DETAIL SHEET FOR TYPICAL BACKER ROD AND SEALANT INSTALLATION DETAILS.
2. CMU BLOCKING SHOWN FOR MATERIAL TYPE PLACEMENT ONLY. ACTUAL BLOCK COURSING AND SIZES WRAPPING COLUMNS ARE TO BE WORKED OUT IN THE FIELD WITH MASON.

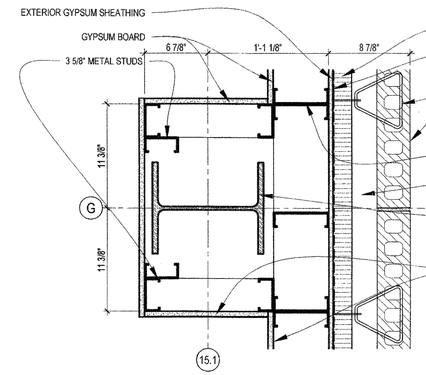

3 DETAIL
A5.06 SCALE: 1 1/2" = 1'-0"

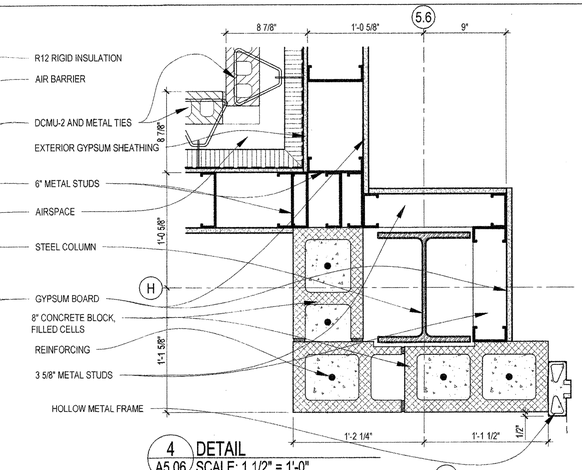

4 DETAIL
A5.06 SCALE: 1 1/2" = 1'-0"

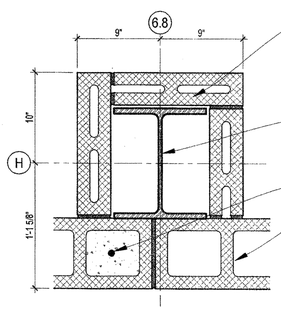

5 DETAIL
A5.06 SCALE: 1 1/2" = 1'-0"

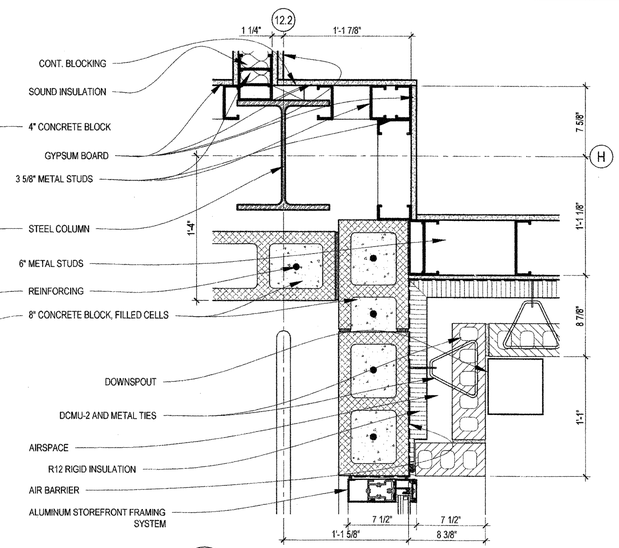

6 DETAIL
A5.06 SCALE: 1 1/2" = 1'-0"

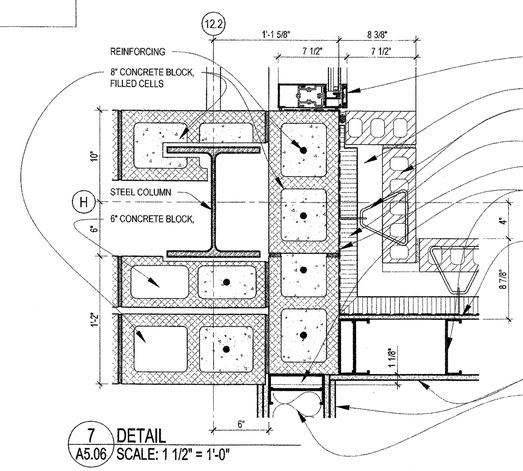

7 DETAIL
A5.06 SCALE: 1 1/2" = 1'-0"

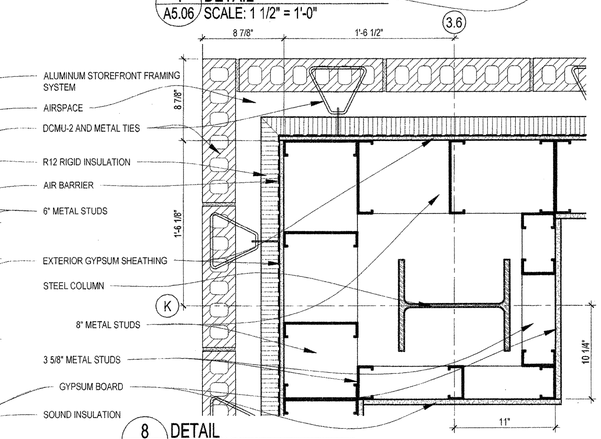

8 DETAIL
A5.06 SCALE: 1 1/2" = 1'-0"

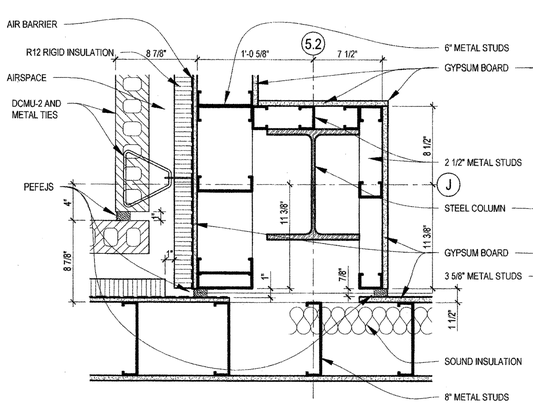

9 DETAIL
A5.06 SCALE: 1 1/2" = 1'-0"

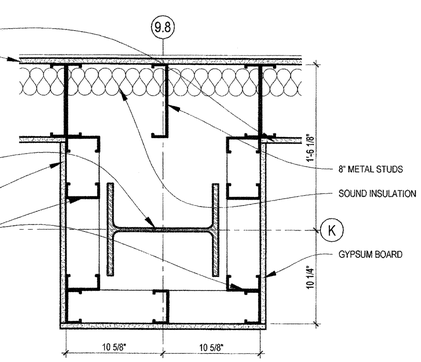

10 DETAIL
A5.06 SCALE: 1 1/2" = 1'-0"

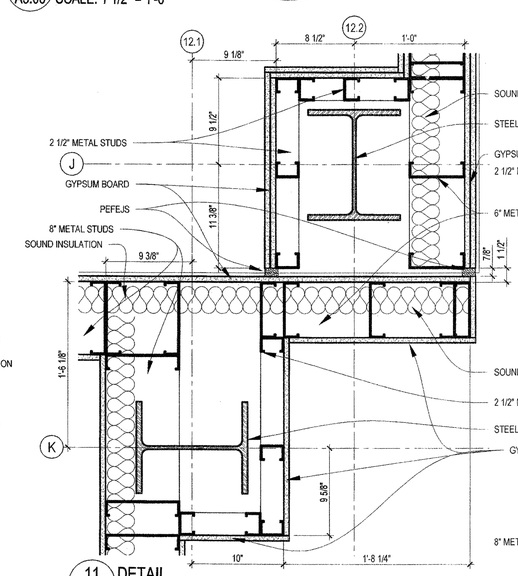

11 DETAIL
A5.06 SCALE: 1 1/2" = 1'-0"

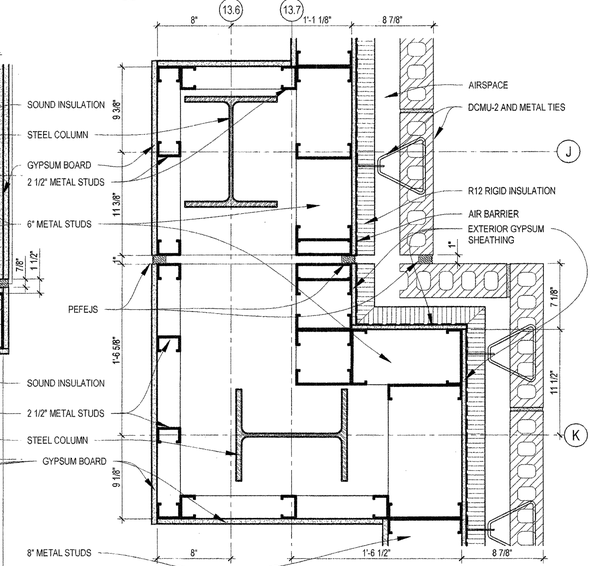

12 DETAIL
A5.06 SCALE: 1 1/2" = 1'-0"

VergesRome Architects
FANNING HOWEY
A Joint Venture
320 N. Carrollton Avenue, Suite 100
New Orleans, Louisiana 70119
t. 504.488.7739 f. 504.488.7743

© copyright 2012

ERNEST E. VERGES III
REG. NO. 3906
STATE OF LOUISIANA
REGISTERED ARCHITECT

NEW 3 SECTION ELEMENTARY SCHOOL AT FISK-HOWARD SCHOOL
RECOVERY SCHOOL DISTRICT

211 S. LOPEZ STREET NEW ORLEANS, LOUISIANA 70119

DATE ISSUED:	7 DECEMBER, 2012
REVISED:	
REVISED:	
REVISED:	
REVISED:	
DRAWN BY:	RMH
CHECKED BY:	DGR, JFM

PHASE:
BID DOCUMENTS

11085

TITLE:
2ND FLOOR PLAN DETAILS

SHEET:
A5.06