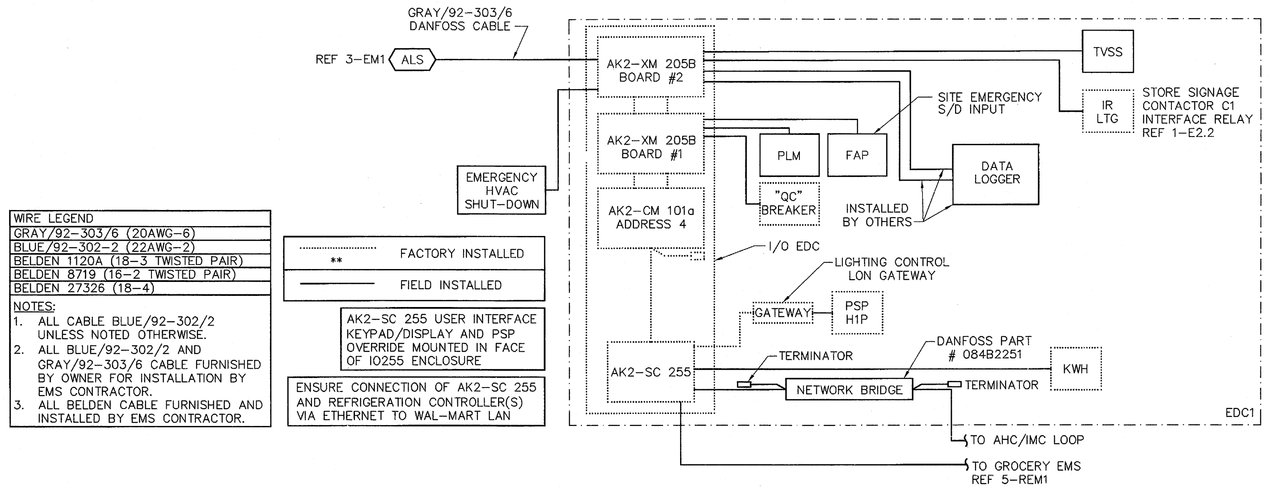

WIRE LEGEND
GRAY/92-303/6 (20AWG-6)
BLUE/92-302-2 (22AWG-2)
BELDEN 1120A (18-3 TWISTED PAIR)
BELDEN 8719 (16-2 TWISTED PAIR)
BELDEN 27326 (18-4)

NOTES:
1. ALL CABLE BLUE/92-302/2 UNLESS NOTED OTHERWISE.
2. ALL BLUE/92-302/2 AND GRAY/92-303/6 CABLE FURNISHED BY OWNER FOR INSTALLATION BY EMS CONTRACTOR.
3. ALL BELDEN CABLE FURNISHED AND INSTALLED BY EMS CONTRACTOR.

FACTORY INSTALLED
FIELD INSTALLED

AK2-SC 255 USER INTERFACE KEYPAD/DISPLAY AND PSP OVERRIDE MOUNTED IN FACE OF IO255 ENCLOSURE

ENSURE CONNECTION OF AK2-SC 255 AND REFRIGERATION CONTROLLER(S) VIA ETHERNET TO WAL-MART LAN

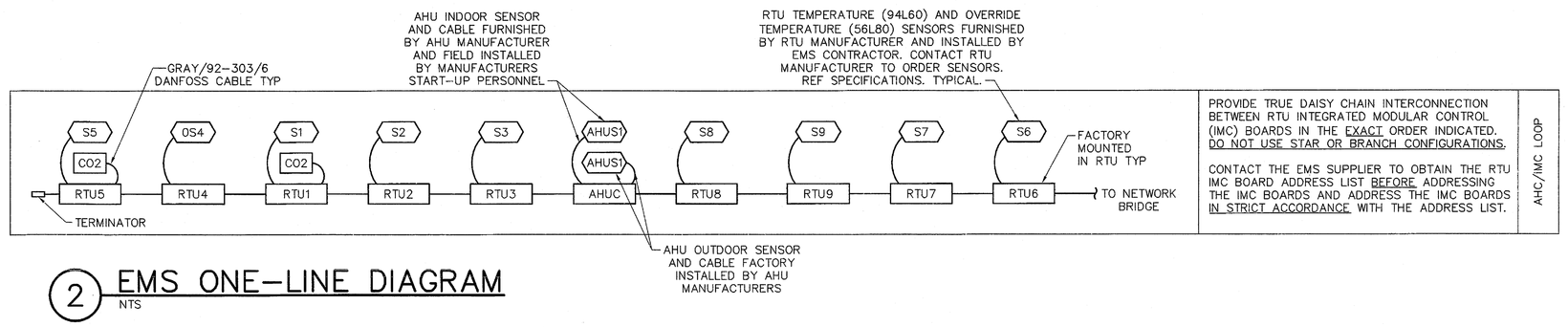

PROVIDE TRUE DAISY CHAIN INTERCONNECTION BETWEEN RTU INTEGRATED MODULAR CONTROL (IMC) BOARDS IN THE EXACT ORDER INDICATED. DO NOT USE STAR OR BRANCH CONFIGURATIONS.

CONTACT THE EMS SUPPLIER TO OBTAIN THE RTU IMC BOARD ADDRESS LIST BEFORE ADDRESSING THE IMC BOARDS AND ADDRESS THE IMC BOARDS IN STRICT ACCORDANCE WITH THE ADDRESS LIST.

AHC/IMC LOOP

2 EMS ONE-LINE DIAGRAM
NTS

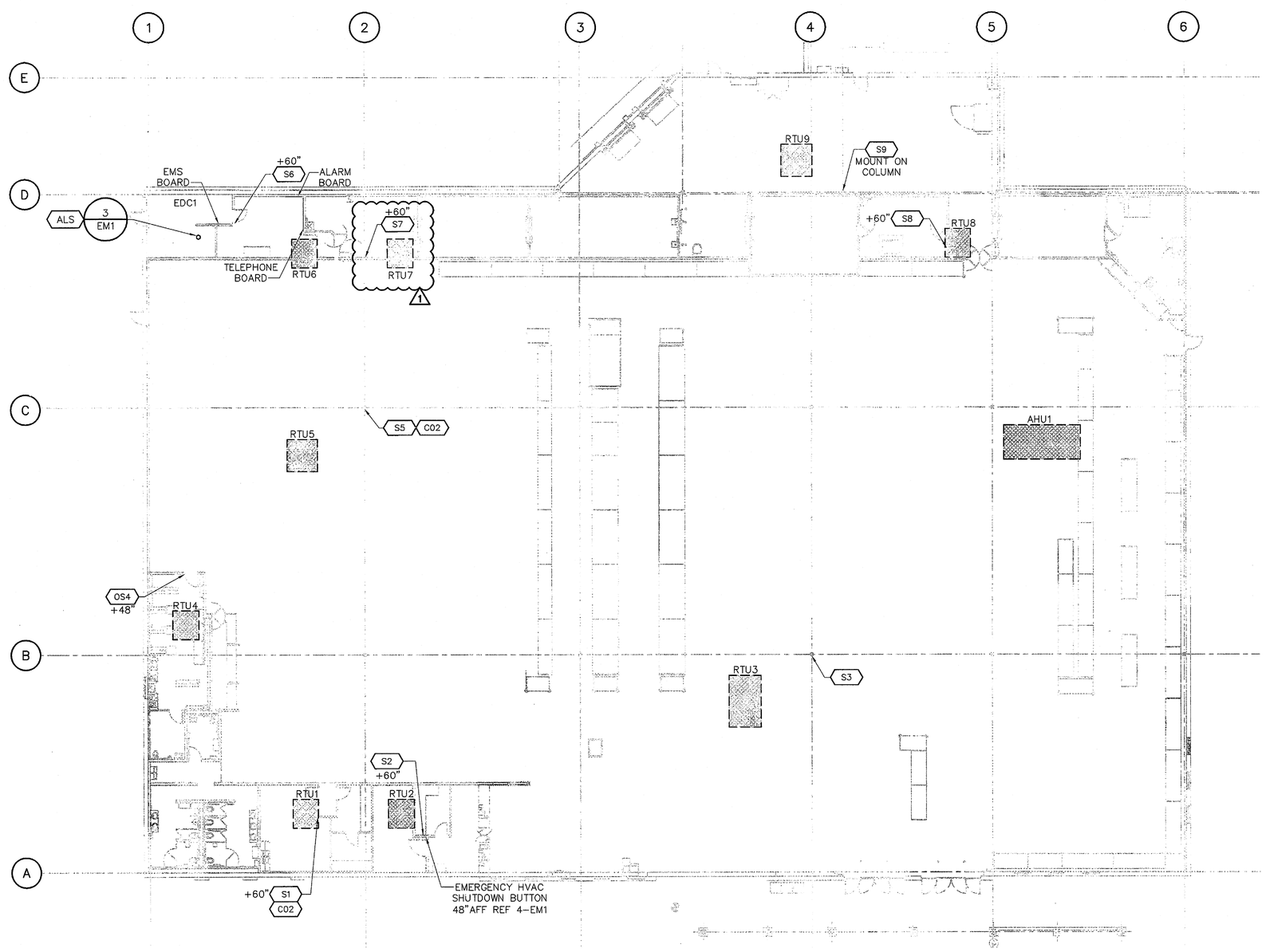

1 ENERGY MANAGEMENT PLAN
1/16" = 1'-0"

EDC1 I/O SCHEDULE:

AK2 COMMUNICATIONS MODULE 4

AK2-XM 205B COMBO MODULE		
OUTPUTS BD #2		
BD	#	DESCRIPTION
2	1	WM SIGNS (EDC IR)
2	2	OPEN
2	3	OPEN
2	4	OPEN
2	5	OPEN
2	6	OPEN
2	7	OPEN
2	8	OPEN
INPUTS BD #2		
BD	#	DESCRIPTION
2	1	ALS/OUTDOOR (R)
2	2	TVSS ALARM (H1P)
2	3	EMERGENCY HVAC SHUTDOWN
2	4	OPEN
2	5	OPEN
2	6	OPEN
2	7	LOAD SHED HVAC (R)
2	8	LOAD SHED LIGHTS (R)

AK2-XM 205B COMBO MODULE		
OUTPUTS BD #1		
BD	#	DESCRIPTION
1	1	DEMAND SHED PULSER (R)
1	2	INTERIOR LIGHTS OVR (R)
1	3	EXTERIOR LIGHTS OVR (R)
1	4	OPEN
1	5	OPEN
1	6	OPEN
1	7	OPEN
1	8	TEST ALARM (R)
INPUTS BD #1		
BD	#	DESCRIPTION
1	1	DEMAND SHED PULSER (R)
1	2	INTERIOR LIGHTS OVR (R)
1	3	EXTERIOR LIGHTS OVR (R)
1	4	DEMAND SHED PULSER (R)
1	5	PHASE LOSS MONITOR (R)
1	6	SITE EMERGENCY S/D (R)
1	7	QC BREAKER (R)
1	8	DEMAND METER (R)

(R) INDICATES FACTORY RESERVED I/O POINT

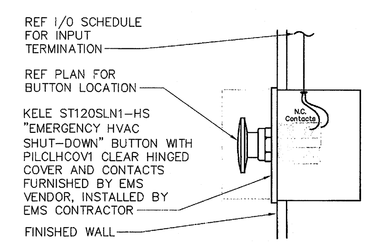

EMERGENCY HVAC SHUT-DOWN SEQUENCE OF OPERATION

THE EMS SHALL DISABLE THE RTU AND AHU HVAC UNITS WHEN BUTTON IS PUSHED.
THE EMS SHALL ENABLE THE RTU AND AHU HVAC UNITS WHEN BUTTON IS PULLED.

4 EMERGENCY HVAC SHUT-DOWN WIRING
NTS 10.29.10 ME15 (DANFOSS)

INSTALL OUTDOOR SENSOR ASSEMBLY IN ACCORDANCE WITH EMS SUPPLIER INSTRUCTIONS. ATTACH TO CONDUIT WITH U-BOLTS FURNISHED WITH KIT AND MOUNT SENSOR ASSEMBLY FACING NORTH

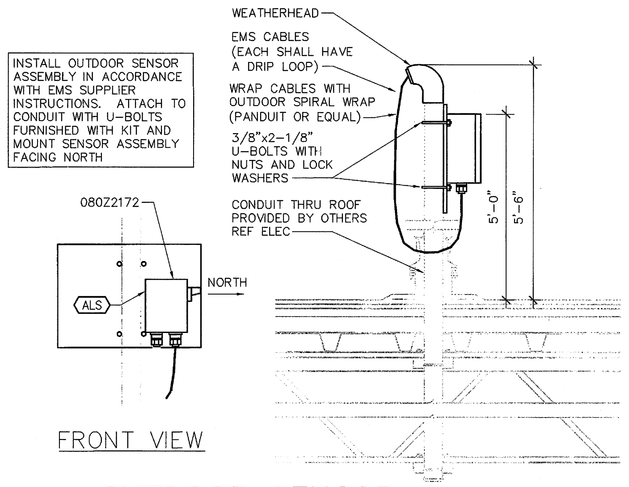

3 OUTDOOR SENSOR ASSEMBLY MOUNTING
NTS ME01 (DANFOSS)

GENERAL EMS NOTES

1. TEMPERATURE SENSOR MOUNTING: PROVIDE 1/2" CONDUIT AND INSTALL EMS CABLE FROM SENSOR TO CONTROL MODULE. MOUNT SENSOR ON BOX. ALL SENSORS TO BE MOUNTED +84" UNLESS NOTED OTHERWISE. SENSORS ON SALES FLOOR SHALL BE MOUNTED ON THE FRONT OF THE COLUMN. DO NOT INSTALL SENSORS IN HVAC SUPPLY AIR PATH OR IN DIRECT SUNLIGHT. REF MECHANICAL DRAWINGS FOR EXACT LOCATIONS.
   A. GYPSUM BOARD WALLS: PROVIDE A 4" SQUARE RECESSED BOX WITH A SINGLE GANG PLASTER RING FLUSH MOUNTED HORIZONTALLY.
   B. BLOCK WALLS AND COLUMNS: PROVIDE A 2"x4" BOX SURFACE MOUNTED HORIZONTALLY.
   C. INSULATE BEHIND SENSORS MOUNTED ON EXTERIOR WALL WITH 1/2" POLYSTYRENE SPACER.
2. EDC VENDOR SHALL INSTALL ALL BASEPLATES AND EMS CONTRACTOR SHALL PROVIDE ELECTRONICS ACCORDING TO EMS SUPPLIER INSTALLATION INSTRUCTIONS.
3. UNLESS NOTED OTHERWISE EMS EQUIPMENT IS FURNISHED AS PART OF THE EDC.
4. TERMINATIONS SHALL BE MADE IN ACCORDANCE WITH EMS SUPPLIER INSTRUCTIONS. NO FOIL OR UNUSED WIRE(S) SHALL BE EXPOSED AFTER APPLICATION OF HEAT SHRINK.
5. CABLE: EMS CONTRACTOR SHALL PROVIDE CABLE ACCORDING TO DRAWINGS. NO DEVIATION FROM DRAWINGS WILL BE ACCEPTED. CABLES SHALL HAVE EACH END LABELED INDICATING WHERE THE OPPOSITE END TERMINATES. CABLE SHALL BE INSTALLED IN CONDUIT OR CABLE TRAY IN FINISHED AREAS OF BUILDING.
6. MINOR CHANGES IN MATERIALS OR TERMINATION POINTS SHALL NOT INCREASE CONTRACT COST.
7. INDOOR DEWPOINT SENSOR AND INDOOR TEMPERATURE SENSOR: PROVIDE 1/2" CONDUIT AND EMS CABLE FROM SENSOR TO IOM/2. MOUNT SENSOR ON 2"x4" BOX MOUNTED HORIZONTALLY ON FRONT OF COLUMN. MOUNT TEMPERATURE SENSOR AT +84" WITH DEWPOINT SENSOR 6" ABOVE.
8. ROUTE EMS CONDUITS IN SALES AREA CONCEALED (IN WALLS, PIPE RACKS AND/OR CHASES). PROVIDE A TRANSITION FROM THE PVC UNDERSLAB EMS CONDUIT TO EMT OR FLEX. EMS CABLES SHALL BE RUN IN CONDUIT FULL LENGTH, BENEATH REFRIGERATED CASES. EMS CABLES AT BAR JOIST LEVEL IN THE STOCKROOM CAN BE EXPOSED.
9. EMS CONTRACTOR SHALL CALIBRATE ALL DEWPOINT (ODS, IDS) SENSORS PER THE SENSOR MANUFACTURER'S INSTRUCTIONS IMMEDIATELY PRIOR TO LEAVING THE JOB.
10. WHERE GROUPED CONDUITS ARE INSTALLED WITHIN THE JOIST SPACE, COORDINATE WITH SPRINKLER CONTRACTOR PRIOR TO INSTALLATION IN ORDER TO MAINTAIN REQUIRED CLEARANCES FROM SPRINKLERS.

EMS SYMBOLS

ALS	ANALOG LIGHT SENSOR
S#	RTU TEMPERATURE SENSOR
AHUC	AIR HANDLING UNIT CONTROLLER
RTU#	RTU INTEGRATED MODULAR CONTROL BOARD (IMC)
OS#	RTU OVERRIDE TEMPERATURE SENSOR
FAP	FIRE ALARM PANEL
CO2	CARBON DIOXIDE SENSOR
KWH	DEMAND METER
IR	INTERFACE RELAY
PLM	PHASE LOSS MONITOR
PSP	POWER SWITCHING PANEL
AK2-CM	COMMUNICATIONS MODULE
AK2-XM	EXTENSION MODULE
AK2-SC	MASTER CONTROLLER
AHUS#	AHU TEMP/RH SENSOR
TVSS	SURGE SUPPRESSION DEVICE

STIPULATION FOR REUSE
THE DRAWINGS REPRESENTED FOR THIS PROJECT ARE THE PROPERTY OF HENDERSON ENGINEERS AND MAY NOT BE REPRODUCED OR REUSED WITHOUT THE WRITTEN CONSENT OF HENDERSON ENGINEERS. THEY ARE NOT TO BE USED ON A DIFFERENT PROJECT SITE OR AT A LATER TIME ON THIS PROJECT SITE AS A REFERENCE OR EXAMPLE OR TRANSFERRED TO OTHERS FOR USE BY SERVICERS OF PROPERLY LICENSED PROFESSIONALS. ANY REUSE, REPRODUCTION OR THE DISCLOSURE FOR ANY PURPOSE OTHER THAN THE INTENDED PROJECT IS PROHIBITED WITHOUT THE WRITTEN CONSENT OF HENDERSON ENGINEERS.

CONSULTANTS
HENDERSON ENGINEERS
8000 STATE LINE
LENEXA, KS 66214
TEL 913.742.3000 FAX 913.742.3001
www.henderson.com
1291195343
LA. CORPORATE REGISTRY
LICENSE NO. 25-1291-7

Walmart's Market
COVINGTON, LA
STORE NO. 3042-00
JOB NUMBER: 97120128 PROTO: 41

ISSUE BLOCK

1	02/09/12	REV. #3

CHECKED BY:	LS
DRAWN BY:	BLB
FILE NAME:	EM1
PROTO CYCLE:	072911
DOCUMENT DATE:	092111

STATE OF LOUISIANA
SCOTT JOSEPH JACK
License No. 34002
PROFESSIONAL ENGINEER
IN
MECHANICAL ENGINEERING
2/10/12

ENERGY MANAGEMENT PLAN

Danfoss

SHEET: EM1

W:\Sheets\3000s to 6700\3042-00 - COVINGTON - LA\129195343 Covington LA 3042-00\3000\mechplot\5919 - EM1 ENERGY MANAGEMENT PLAN - 3042.dwg, Plot: 2/09/2012 3:29:21 PM, scottmcfadden, 1:1
SCOTT J. JACK