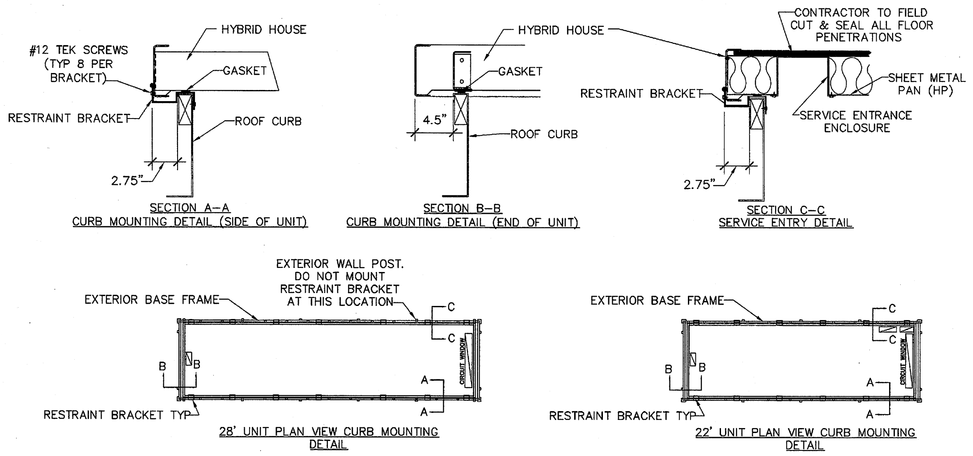

RESTRAINT BRACKETS ARE FURNISHED WITH ROOF CURBS. PROVIDE NEOPRENE TAPE GASKET BETWEEN CURB AND HYBRID HOUSE. INSTALL GASKET AND BRACKETS BEFORE PLACEMENT OF HYBRID HOUSE. BRACKET CONSTRUCTION, QUANTITIES, AND SPACING SHOWN ON THIS DETAIL IS FOR GENERAL COORDINATION ONLY. INSTALL BRACKETS ACCORDING TO CURB MANUFACTURER'S INSTALLATION INSTRUCTIONS. COORDINATE FINAL BRACKET LOCATIONS WITH EQUIPMENT. DO NOT OBSTRUCT OPENINGS OR UTILITY CONNECTIONS.

10 HYBRID HOUSE SEISMIC/WIND RESTRAINT BRACKET

NTS 06.03.11 MR18 (HILL PHOENIX)

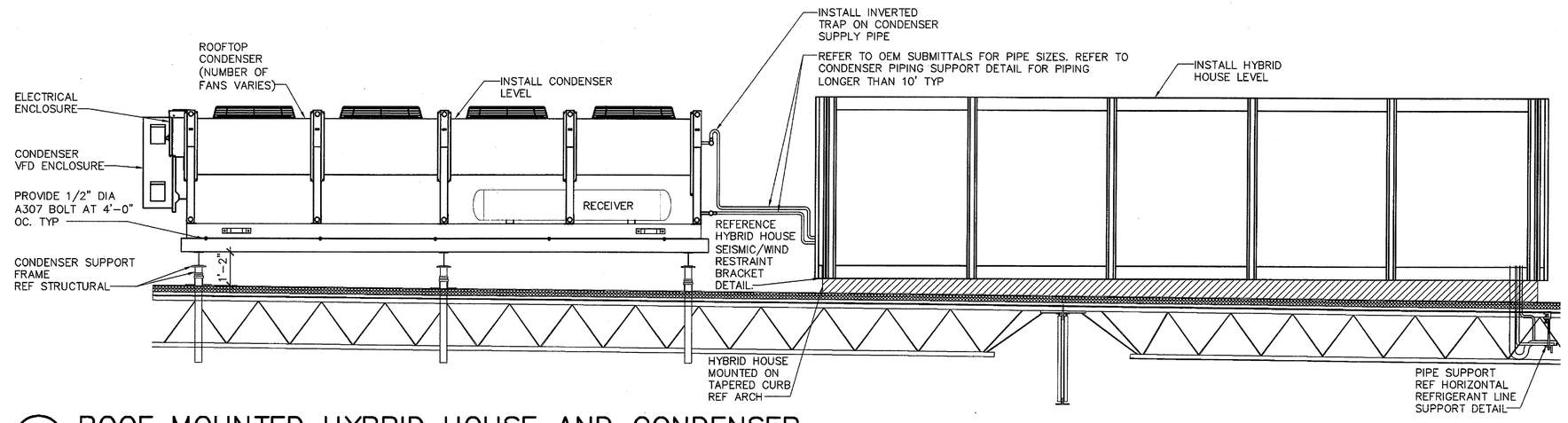

9 ROOF MOUNTED HYBRID HOUSE AND CONDENSER

NTS 02.26.10 MR15 (HILL PHOENIX)

KEYNOTES

15.600 PITCH 2" PVC CONDENSATE DRAIN 1" PER 10 FT. TOWARD DRAIN. PROVIDE COPPER PIPING WITH ELECTRIC HEAT TAPE AND INSULATION ON CONDENSATE LINES EXPOSED TO FREEZING.

15.601 SLOPE REFRIGERANT LINES DOWN TOWARD COMPRESSORS AT 1" PER 20 FT AND TRAP BEFORE RISER THROUGH ROOF. LOCATE HIGHEST POINT OF REFRIGERANT LINES JUST BELOW ROOF DECK OVER COIL SERVED. ROUTE THROUGH WEBS IN JOISTS AND GIRDERS. COORDINATE WITH HVAC, LIGHTING, AND FIRE PROTECTION.

15.602 SEAL AROUND PIPING AND BOLT PENETRATIONS THRU COOLER/FREEZER BOX WALLS OR CEILINGS WITH BACKER ROD AND SEALANT.

15.603 SUPPORT EVAPORATORS WITH BOLTS THRU CEILING PANEL TO 1 5/8" X 1 5/8" X 10 FT. LONG 14 GAUGE. GALVANIZED UNISTRUT SPANNING THREE COOLER/FREEZER CEILING PANELS. PROVIDE DOUBLE NUTS ON EACH BOLT.

15.604 TERMINATE 2" CONDENSATE DRAIN OVER FLOOR SINK, HUB DRAIN OR SERVICE SINK WITH AIR GAP.

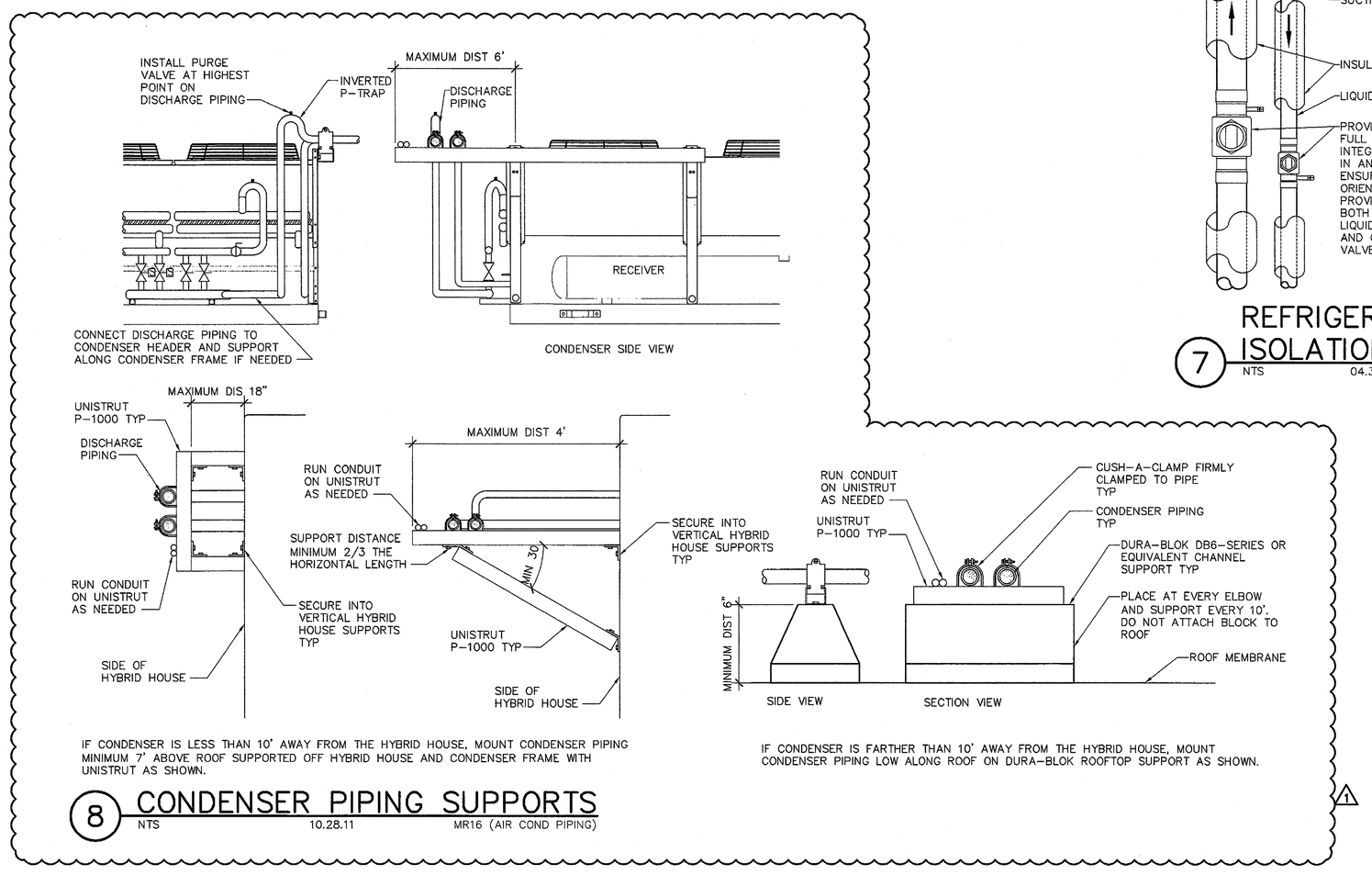

IF CONDENSER IS LESS THAN 10' AWAY FROM THE HYBRID HOUSE, MOUNT CONDENSER PIPING MINIMUM 7' ABOVE ROOF SUPPORTED OFF HYBRID HOUSE AND CONDENSER FRAME WITH UNISTRUT AS SHOWN.

IF CONDENSER IS FARTHER THAN 10' AWAY FROM THE HYBRID HOUSE, MOUNT CONDENSER PIPING LOW ALONG ROOF ON DURA–BLOK ROOFTOP SUPPORT AS SHOWN.

8 CONDENSER PIPING SUPPORTS

NTS 10.28.11 MR16 (AIR COND PIPING)

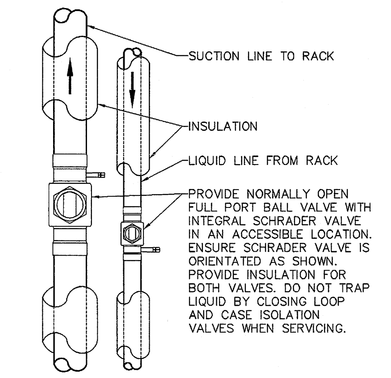

7 REFRIGERATION ISOLATION VALVES

NTS 04.30.10 MR17

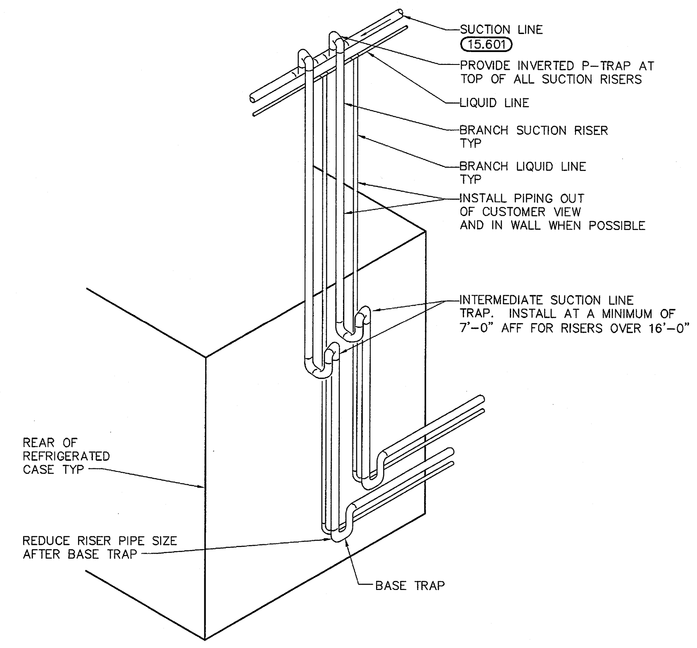

6 INTERMEDIATE SUCTION LINE TRAP

NTS 05.10.09 MR05 (LOOP)

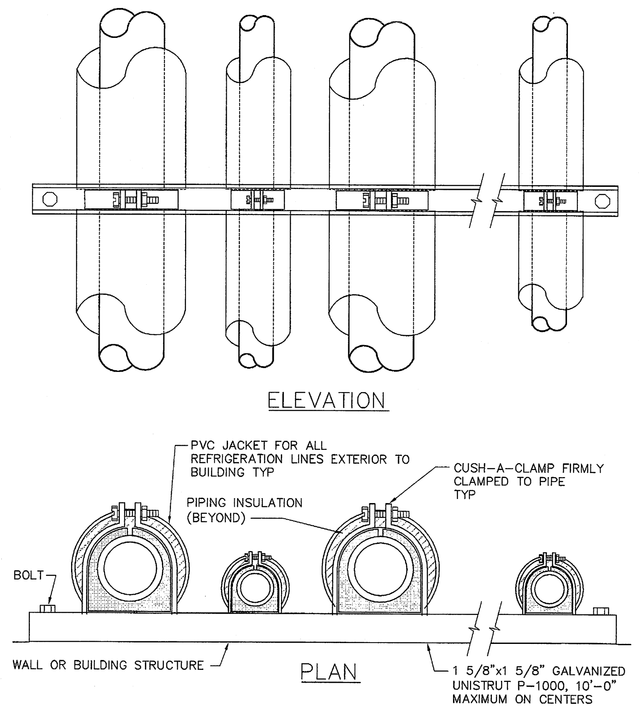

5 VERTICAL REFRIGERANT LINE SUPPORT

NTS 06.29.01 MR04

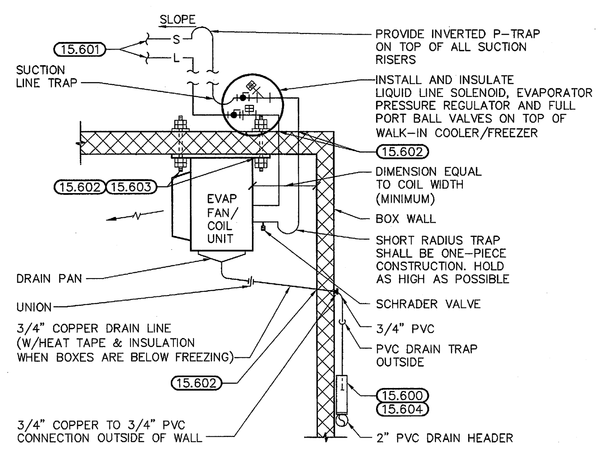

4 EVAPORATOR FAN/COIL UNIT

NTS 05.10.09 MR02 (LOOP)

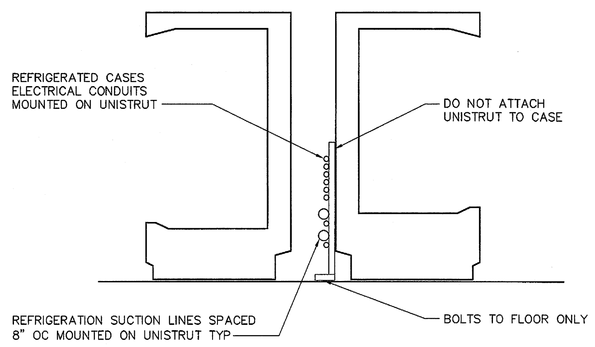

3 LINE RACKING BEHIND REFRIGERATED BOXES

NTS 06.29.01 MR01

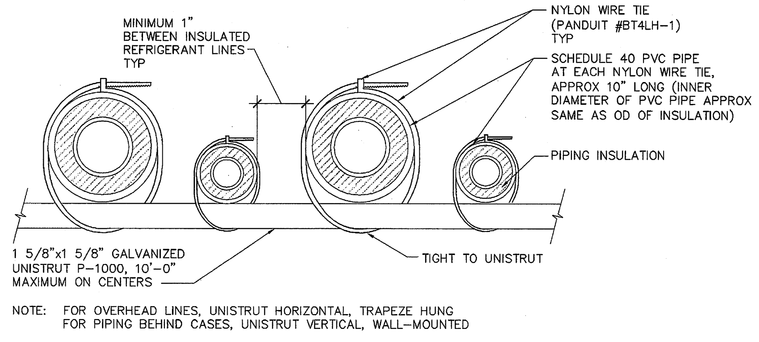

NOTE: FOR OVERHEAD LINES, UNISTRUT HORIZONTAL, TRAPEZE HUNG FOR PIPING BEHIND CASES, UNISTRUT VERTICAL, WALL–MOUNTED

2 HORIZONTAL REFRIGERANT LINE SUPPORT

NTS 06.29.01 MR03

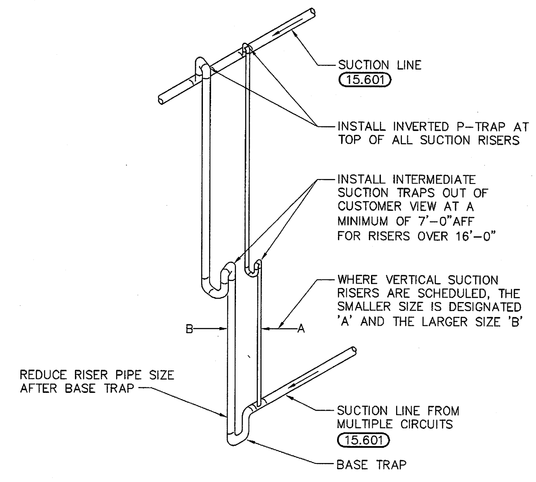

1 VERTICAL SUCTION DOUBLE RISER

NTS 05.10.09 MR06 (LOOP)

STIPULATION FOR REUSE

THIS DRAWING IS PROVIDED FOR USE ON THIS PROJECT ONLY AND SHALL NOT BE USED ON OTHER WORK WITHOUT THE WRITTEN CONSENT OF HENDERSON ENGINEERS. THIS DRAWING IS A DIFFERENT PRODUCT THAN A CONTRACT DOCUMENT. ANY USE FOR REFERENCE OR EXAMPLE ON OTHER PROJECTS OR FOR ANY OTHER PURPOSES BY OTHERS IS OK AS LONG AS THIS STATEMENT IS INCLUDED. ANY REPRODUCTION OF THE DRAWING FOR USE ON THIS PROJECT IS PROHIBITED BY THE LAW AND MAY BE CONTRARY TO YOUR INTERESTS.

CONSULTANTS

HENDERSON ENGINEERS
8345 KIDDER DRIVE
LENEXA, KS 66214
TEL 913.742.3000 FAX 913.742.3011
www.henderson.com
LA CORPORATE BUSINESS LICENSE 1291495042
LA CORPORATE BUSINESS LICENSE 1291495042
LA LICENSED ARCHITECT

Walmart's Market
COVINGTON, LA
STORE NO.3042-00

JOB NUMBER: 97130128 PROTO: 41

ISSUE BLOCK

1	02/09/12	REV. #3

CHECKED BY:	FH
DRAWN BY:	JAJ
FILE NAME:	R3
PROTO CYCLE:	072911
DOCUMENT DATE:	092111

STATE OF LOUISIANA
SCOTT JOSEPH JACK
License No. 34952
PROFESSIONAL ENGINEER
MECHANICAL ENGINEERING
2/10/12

REFRIG DETAILS

SHEET: R3

SCOTT J. JACK