## SHEET NOTES

1. REF SHEET A7 FOR SCHEDULE FINISH KEY

## KEYNOTES

| | |
|---|---|
| 2.02 | CHAIN LINK FENCING (HEIGHT NOTED BESIDE KEYNOTE) |
| 3.02 | CONCRETE PAVING REF STRUCTURAL |
| 3.05 | CONCRETE CURB |
| 4.04 | CONTROL JOINT TYP REF STRUCTURAL |
| 4.08 | SMOOTH FACE CMU |
| 5.02 | PAINTED 6" PIPE BOLLARD |
| 5.70 | TEMPORARY 6"x6"x1/4"x10'-0" STEEL ANGLE ANCHORED TO CONCRETE SLAB WITH 1/2" SLEEVE ANCHORS AT 48" OC. ANGLE AND ANCHORS TO BE REMOVED BY COMPACTOR SUPPLIER AT COMPACTOR INSTALLATION |
| 7.09 | METAL DOWNSPOUT PAINTED, UNO (SIZE NOTED BESIDE KEYNOTE) |

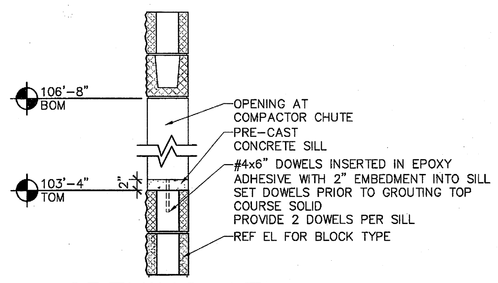


23 OPENING AT COMPACTOR CHUTE
3/4"=1'-0" 042911 C\SP020-011

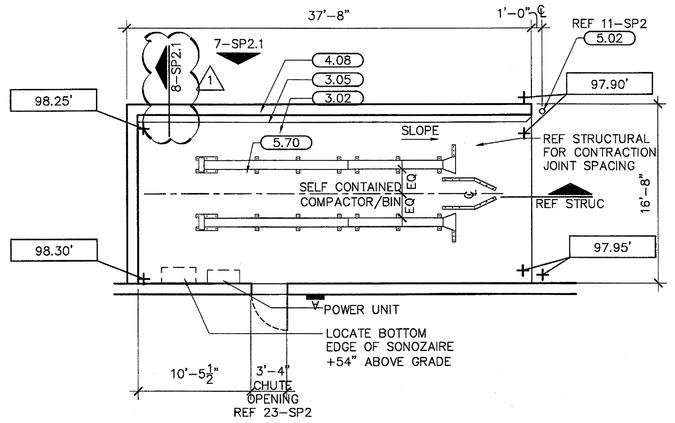


22 COMPACTOR PAD
1/8"=1'-0" 072911 SP020-022-F

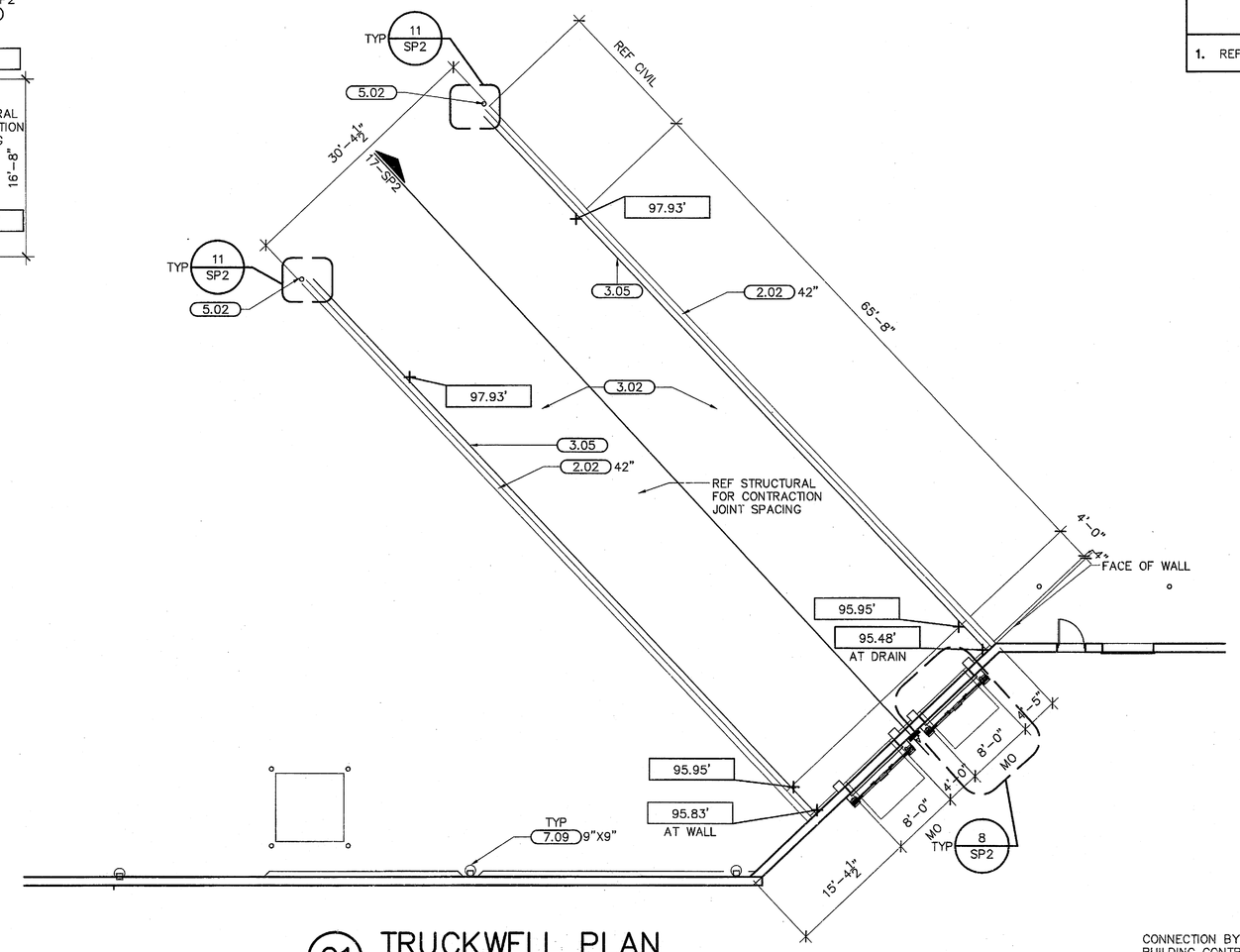


21 TRUCKWELL PLAN
1"=10'-0" 072911 sp020-020-F

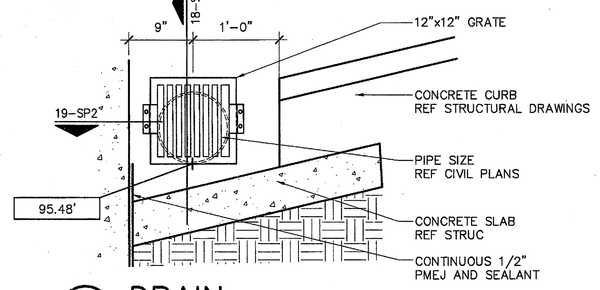


20 DRAIN
1"=1'-0" 042911 SP020-020

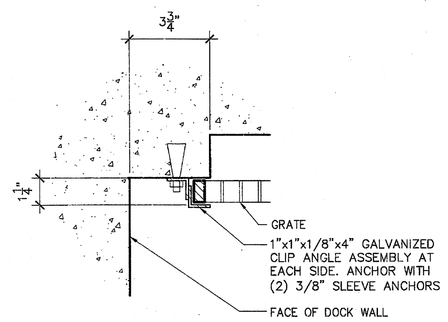


19 TRUCKWELL DRAIN
3"=1'-0" 072806 SP020-019

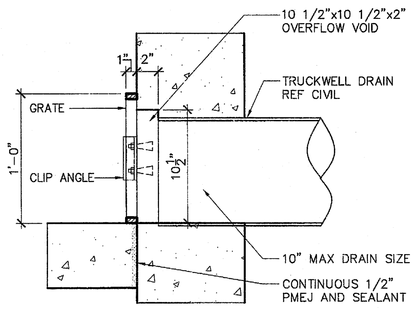


18 TRUCKWELL DRAIN
1 1/2" = 1' - 0" 122906 SP020-018

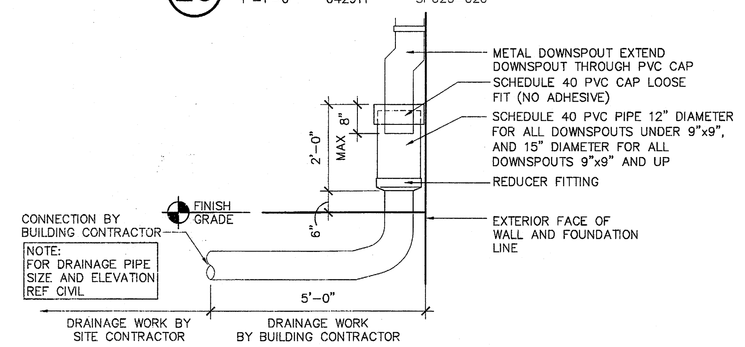


14 DOWNSPOUT
1/2" = 1'-0" 013009 C/SP021-014

16 NOT USED

15 NOT USED

13 NOT USED

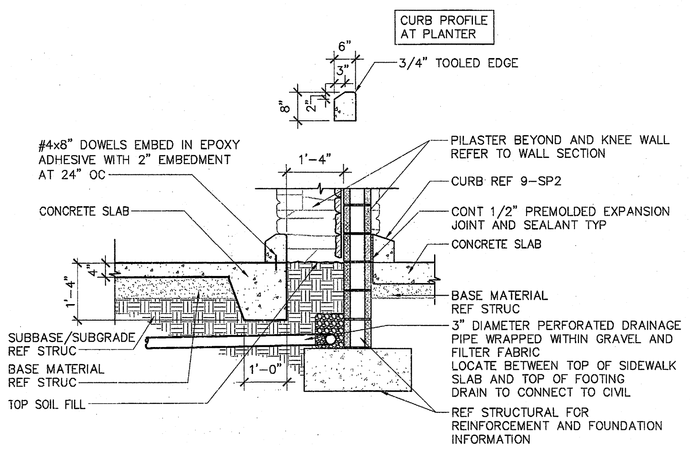


12 CART STORAGE PLANTER
1/2"=1'-0" 042911 SP020-012

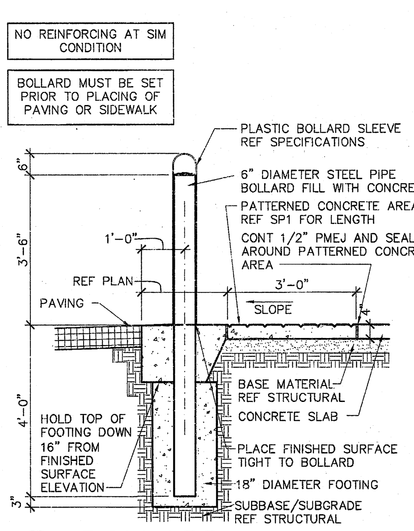


10 BOLLARD
1/2"=1'-0" 052711 c/sp021-010

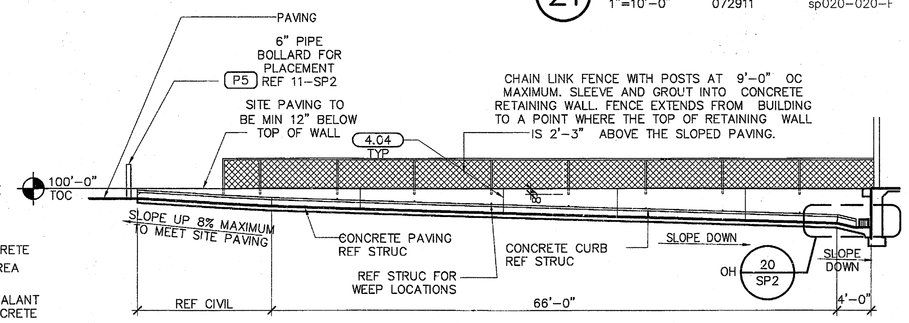


17 TRUCKWELL SECTION
1"=10'-0" 012811 sp020-017-F

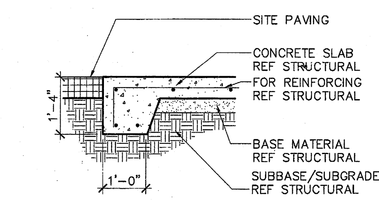


5 PAVING SECTION
1/2"=1'-0" 112808 SP021-005

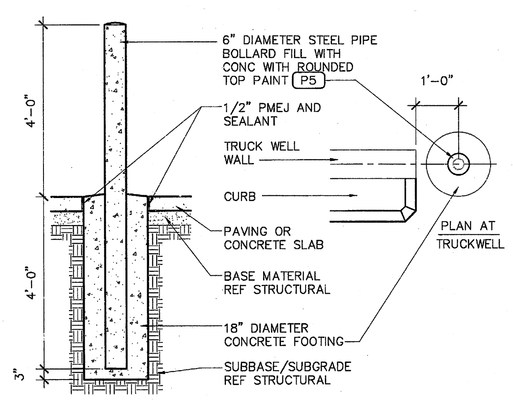


11 BOLLARD LOCATION
1/2"=1'-0" 051009 C\SP021-011

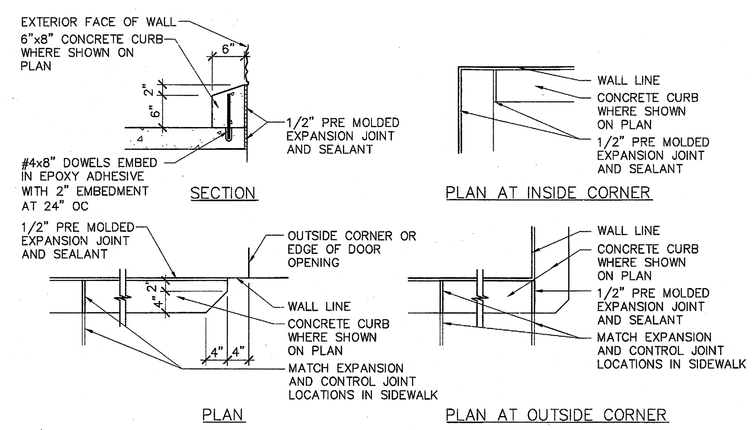


9 CART CURB
3/4" = 1'-0"092509 C\SP021-009

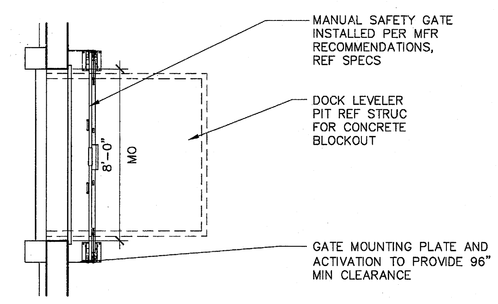


8 ENLARGED DOCK PLAN
1/4"=1'-0" 052511 L90/SP020-009-F

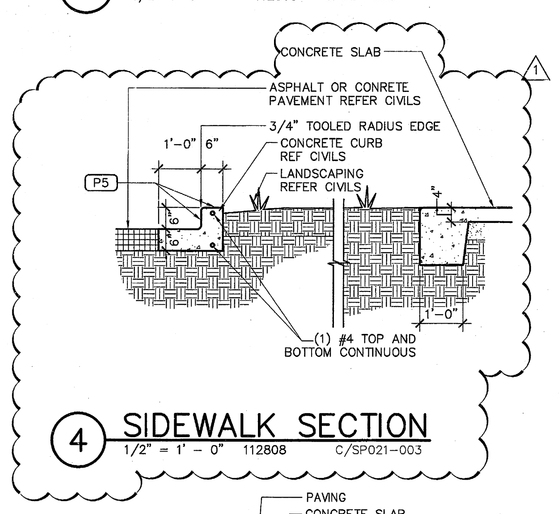


4 SIDEWALK SECTION
1/2" = 1' - 0" 112808 C/SP021-003

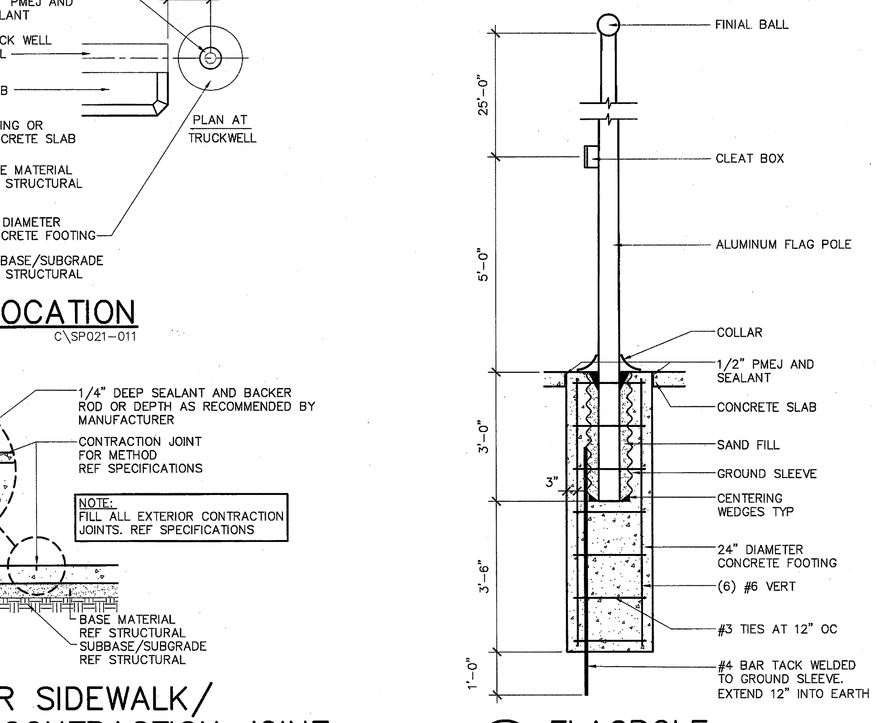


6 FLAGPOLE
1/2"=1'-0" 013009 C\SP020-021_hwind

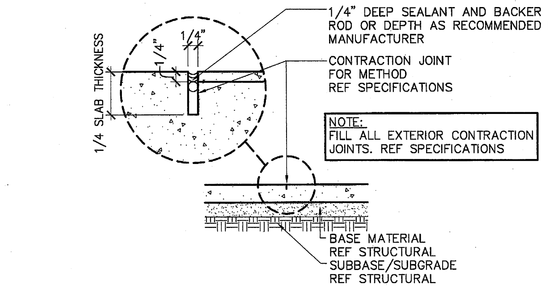


7 EXTERIOR SIDEWALK/ PAVING CONTRACTION JOINT
1/2"=1'-0" 112808 C\SP021-007

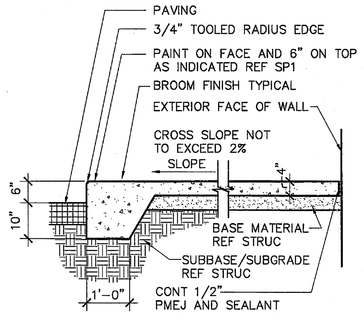


3 SIDEWALK SECTION
1/2" = 1' - 0" 112808 C/SP021-003

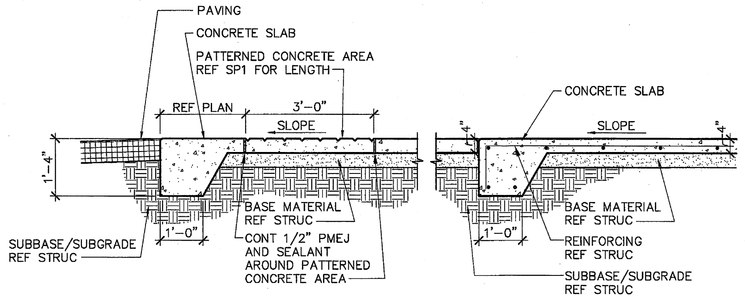


2 SIDEWALK SECTION
1/2" = 1' - 0" 042911 SP020-002

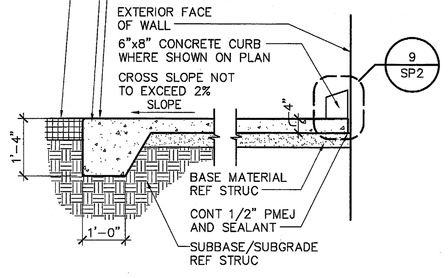


1 SIDEWALK SECTION
1/2" = 1'-0" 123010 C/SP021-001


B|R|R architecture
ARCHITECT OF RECORD: BRR ARCHITECTURE, INC.
6700 ANTIOCH PLAZA, SUITE 200, MERRIAM, KANSAS 66204



STIPULATION FOR REUSE
THIS DRAWING WAS PREPARED FOR COMMERCIAL USE ON THE WALMART STORE NO. 3042-00 COVINGTON, LA CONSTRUCTION PROJECT AND IS NOT SUITABLE FOR USE ON ANOTHER PROJECT. THE USE OF THIS DRAWING ON ANOTHER PROJECT REQUIRES THE WRITTEN CONSENT OF THE ARCHITECTS AND OWNERS. ANY REUSE WITHOUT WRITTEN CONSENT FOR REUSE ON ANOTHER PROJECT IS NOT AUTHORIZED AND WILL BE CONTEST TO THE LAW.


CONSULTANTS

Walmart Market
COVINGTON, LA
STORE NO.3042-00

JOB NUMBER: 97120128 PROTO: 41

ISSUE BLOCK

| | | |
|---|---|---|
| 1 | 12/22/11 | REV #2 |

| | |
|---|---|
| CHECKED BY: | RAP |
| DRAWN BY: | GC |
| FILE NAME: | 41-SP020 |
| PROTO CYCLE: | 072911 |
| DOCUMENT DATE: | 092111 |

RICHARD A. MAJCHRZAK JR. REG. NO. 6980 STATE OF LOUISIANA PROFESSIONAL ENGINEER

SITE DETAILS

SHEET: SP2

BRR ORIGINAL PRINTED ON RECYCLED PAPER

7/25/2011 11:40:45 AM Grazia Cosco