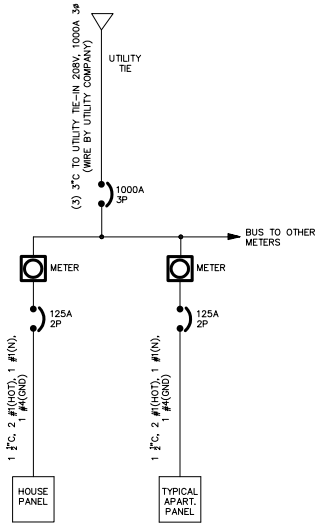

TYPICAL APARTMENT
ONE LINE DIAGRAM

SCALE: NONE

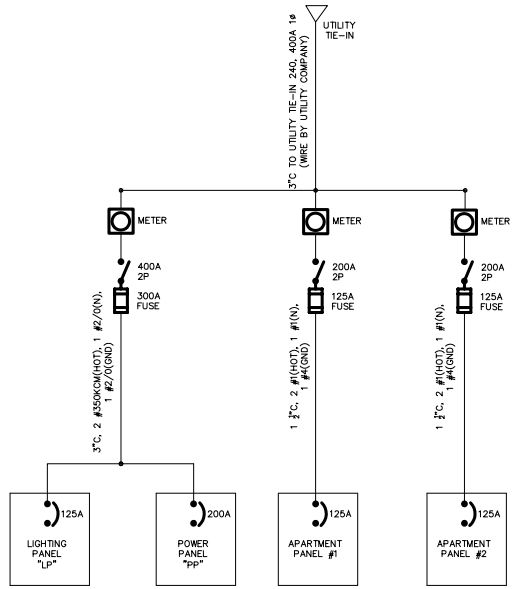

ONE LINE DIAGRAM – CLUB HOUSE BUILDING

SCALE: NONE

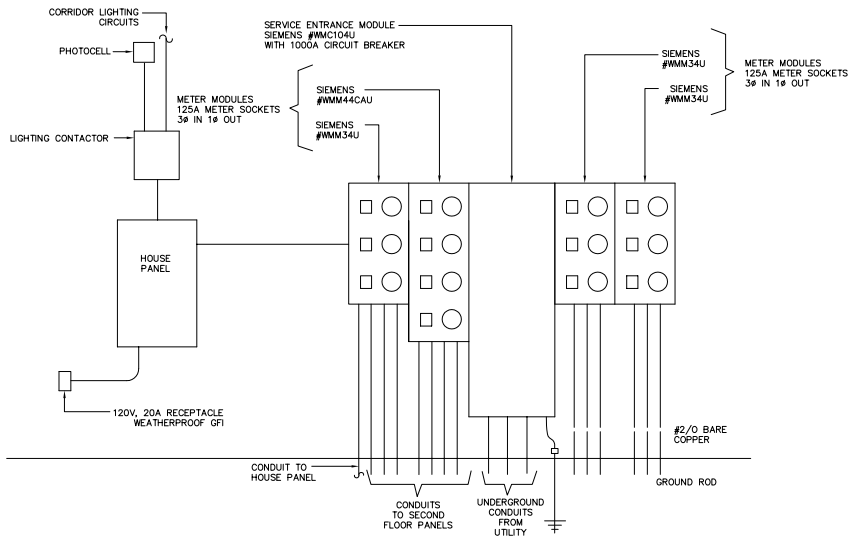

ELEVATION – SERVICE ENTRANCE – TYPICAL APARTMENT

SCALE: NONE

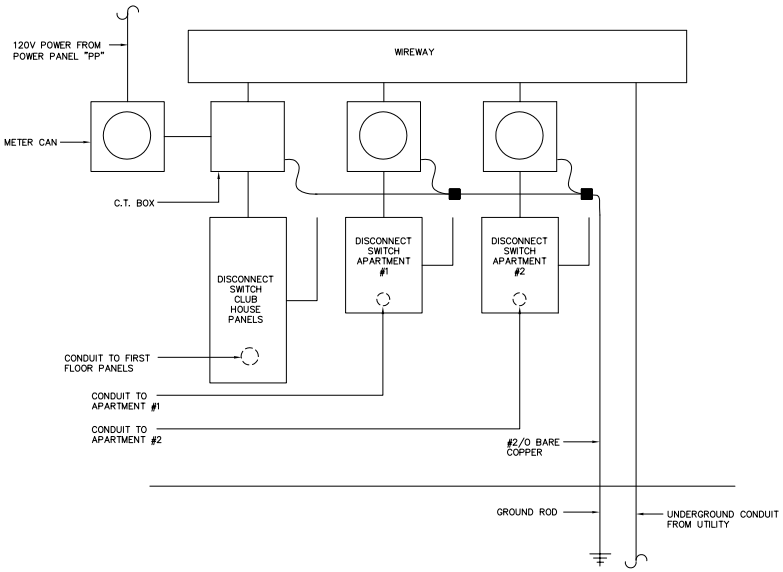

4 E-8 E-1

ELEVATION – SERVICE ENTRANCE – CLUB HOUSE BUILDING

SCALE: NONE

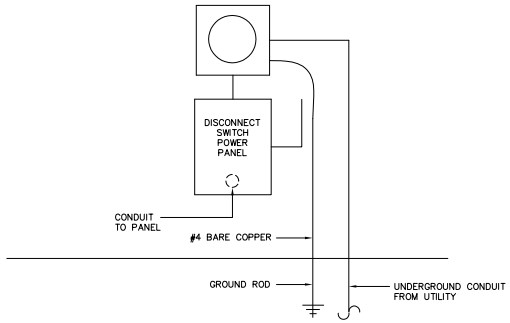

ELEVATION –

5 E-8 E-3 SERVICE ENTRANCE – MAINTENANCE BUILDING

SCALE: NONE

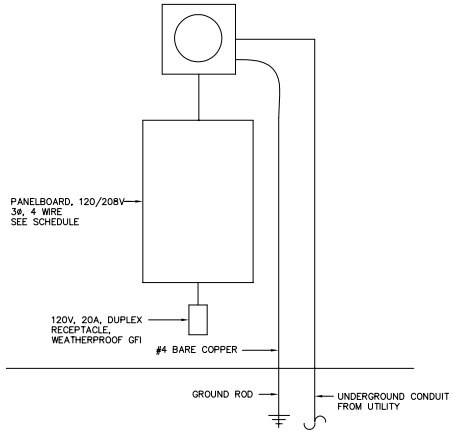

ELEVATION –
SERVICE ENTRANCE – TRASH COMPACTOR

SCALE: NONE

THE BRYAN COMPANY

GRAND POINTE
KALISTE SALOOM RD.
LAFAYETTE, LA.

GRAND POINTE APARTMENTS

DAMMON ENGINEERING, INC.
1095 FLORIDA AVENUE 985-649-5832 SLIDELL, LA. 70458
DAMMONENGINEERING.COM

SCALE: AS NOTED
FILE:
JOB NO.
DATE: 03-29-05
SHEET
E8
OF