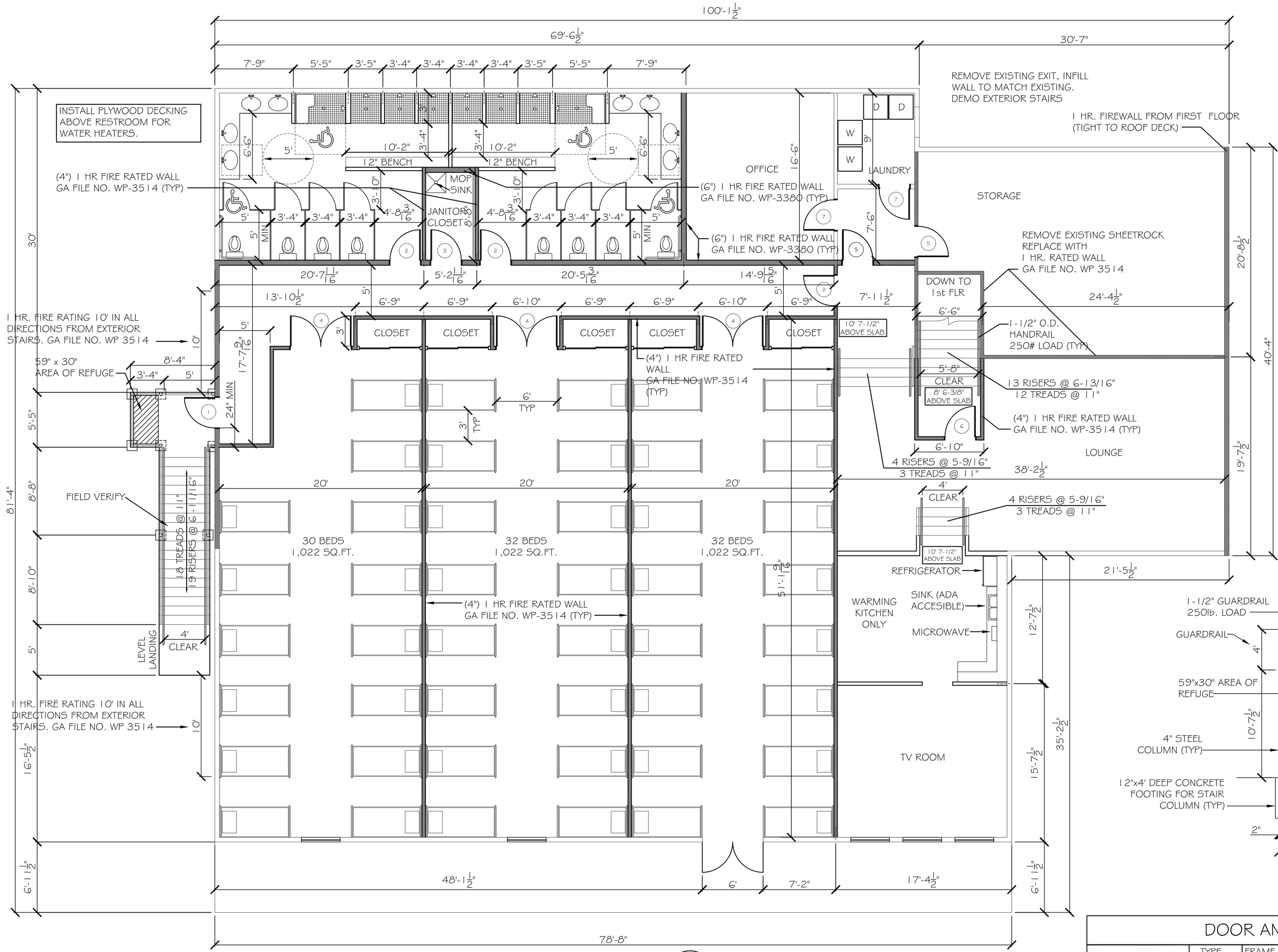

2nd FLOOR PLAN

SCALE: 3/16" = 1'-0"

GENERAL NOTES:
1. PRIOR TO CONSTRUCTION -
   A. REPAIR ALL EXISTING ROOF LEAKS.
   B. RE-FASTEN ALL EXISTING 2nd FLOOR DECKING TO FLOOR JOISTS. REPAIR / REPLACE ANY DECKING THAT MAY BE ROTTED OR WORN.
2. INTERIOR WALLS AND CEILINGS SHALL HAVE A FLAME SPREAD OF 76-200 AND A SMOKE DEVELOPMENT RATING OF 0-450 ACCORDING TO IBC 2006 SECTION 803.1.
3. INTERIOR WALL AND CEILING FINISH MATERIALS IN THE DORMITORY OCCUPANCY COMPLYING WITH NFPA 101 SEC 10.2 SHALL BE PERMITTED AS FOLLOWS:
   A. EXIT ENCLOSURES: CLASS A
   B. LOBBIES AND CORRIDORS: CLASS A OR CLASS B
   C. OTHER SPACES: CLASS A, CLASS B OR CLASS C

NOTE: THIS BUILDING SHALL BE FULLY SPRINKLED.

FIRE PROTECTION NOTES:
1. PROVIDE AN APPROVED AUTOMATIC FIRE ALARM AND SPRINKLER SYSTEM IN ACCORDANCE WITH IBC 2006 SEC 903.2.7. PLANS BY OTHERS.
2. PROVIDE FIRE EXTINGUISHERS IN ACCORDANCE WITH NFPA 10.
3. ALL FIREWALLS SHALL DEMISE TO ROOF DECK.

1 HR. FIRE RATING 10' IN ALL DIRECTIONS FROM EXTERIOR STAIRS. GA FILE NO. WP 3514

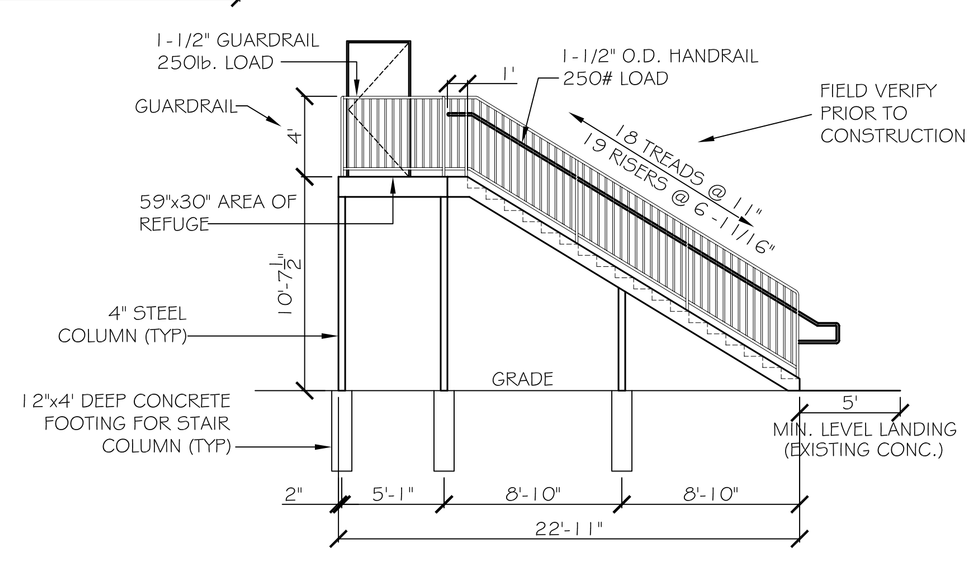

EXTERIOR STAIRS DETAIL

SCALE: 1/4" = 1'-0"

DOOR AND HARDWARE SCHEDULE

#	SIZE	TYPE: WOOD	TYPE: METAL	TYPE: ALUM./GLASS	TYPE: STOREFRONT	FRAME: STEEL	FRAME: ALUMINUM	FRAME: WOOD	HINGE: DOUBLE SWING	HINGE: BUTT	LOCK: PASSAGE	LOCK: PRIVACY	LOCK: DEADBOLT	LOCK: KEYED HANDLE	LOCK: PUSH PULL	ACCESSORIES: PANIC BAR	ACCESSORIES: THRESHOLD	ACCESSORIES: WEATHERSTRIP	ACCESSORIES: DOOR STOP	ACCESSORIES: ALARM	ACCESSORIES: CLOSER	REMARKS
1	3/0x6/8x1-3/4"		●			●				●						●	●	●	●	●	●	130 MPH WIND, 60 MIN. RATED
2	3/0x6/8x1-3/4"		●			●				●	●								●		●	60 MIN. RATED
3	3/0x6/8x1-3/4"		●			●				●									●		●	60 MIN. RATED
4	(2) 3/0x6/8x1-3/4"		●			●				●	●					●			●		●	60 MIN. RATED
5	3/0x6/8x1-3/4"		●			●				●									●		●	60 MIN. RATED
6	3/0x6/8x1-3/4"		●			●				●						●			●		●	60 MIN. RATED
7	3/0x6/8x1-3/4"	●						●		●												

GA FILE NO. WP 3380 GENERIC

ONE LAYER 5/8" TYPE X GYPSUM WALLBOARD OR GYPSUM VENEER BASE APPLIED PARALLEL OR AT RIGHT ANGLES TO EACH SIDE OF 2x4 WOOD STUDS 16" O.C. STAGGERED 8" O.C. ON 2x6 PLATES WITH 6D COATED NAILS, 1-7/8" LONG, 0.0915" SHANK, 1/4" HEADS, 7" O.C. (TIGHT TO ROOF DECK)

JOINTS STAGGERED 24" ON OPPOSITE SIDES. HORIZONTAL BRACING REQUIRED AT MID HEIGHT. (LOAD-BEARING)

1 HOUR FIRE 40 TO 44 STC SOUND

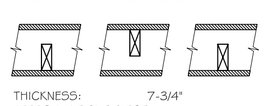

THICKNESS: 7-3/4"
APPROX. WEIGHT: 8 PSF
FIRE TEST: SEE WP 3605 (UL R13119-4, 6, 6-17-52; UL R2717-39, 1-20-66; UL R3501-52, 3-15-66; UL DESIGN U305; ULC DESIGN W301)
SOUND TEST: ESTIMATED

GA FILE NO. WP 3514 GENERIC

ONE LAYER 5/8" TYPE X GYPSUM WALLBOARD OR GYPSUM VENEER BASE APPLIED PARALLEL OR AT RIGHT ANGLES TO EACH SIDE OF 2x4 WOOD STUDS 16" O.C. WITH 1-1/4" TYPE W DRYWALL SCREWS 12" O.C. (TIGHT TO ROOF DECK)

JOINTS STAGGERED 16" ON OPPOSITE SIDES. (LOAD BEARING)

1 HOUR FIRE 35 TO 39 STC SOUND

THICKNESS: 4-3/4"
APPROX. WEIGHT: 7 PSF
FIRE TEST: SWRI 01-4511-619, 8-19-02
SOUND TEST: SEE WP 3520 (G4H NG-246FT, 7-2-65)

DAMMON ENGINEERING, INC.

CHIEF ENGINEER
EMMETT DAMMON, P.E.

CHIEF ARCHITECT
ROBERT WILTSE

1095 FLORIDA AVENUE
SLIDELL, LA. 70458
OFFICE: 985-649-5832
FAX: 985-641-5950

WEBSITE: WWW.DAMMONENGINEERING.COM

EMAIL: DAMMONENG@BELLSOUTH.NET

ARCHITECTURE
ENGINEERING
STUDIES
PLANNING
INVESTIGATION
EXPERT WITNESS

ALDERSGATE UNITED METHODIST ALTERATIONS AND RENOVATIONS

DALE KIMBALL
2515 CAREY STREET
SLIDELL, LA

SECOND FLOOR PLAN

REV: 6-1-09

SCALE: AS NOTED

JOB#: 1795

DATE: 6-17-08

SHEET 4

A-2

OF 8