PANEL SCHEDULE

PANEL: MDP
LOCATION: EXTERIOR WALL BY METER
FEEDER SOURCE: CLECO
VOLTAGE: 120/240V, 400A, 1Φ, 3W
ENCLOSURE: SURFACE MOUNTED, NEMA 3R PNLBD, 400A MB, W/EQUIP GND BAR, 22000 AIC

CKT NO	THHN WIRE SIZE	LOAD DESCRIPTION / LOCATION	BREAKER AMP	BREAKER POLE	LOAD (VA) AΦ	LOAD (VA) BΦ	BREAKER POLE	BREAKER AMP	LOAD DESCRIPTION / LOCATION	THHN WIRE SIZE	CKT NO
1	#6	ZONE 1, CONDENSER UNIT #1 5 TON	50	2	6720	7575	2	70	ZONE 1, AHU #1 5 TON, 15 kw HEAT	#4	2
3					6720	7575					4
5	#6	ZONE 2, CONDENSER UNIT #1 5 TON	50	2	6720	7575	2	70	ZONE 2, AHU #1 5 TON, 15 kw HEAT	#4	6
7					6720	7575					8
9	#6	ZONE 3, CONDENSER UNIT #1 5 TON	50	2	6720	7575	2	70	ZONE 3, AHU #1 5 TON, 15 kw HEAT	#4	10
11					6720	7575					12
13	#6	ZONE 4, CONDENSER UNIT #1 5 TON	50	2	6720	7575	2	70	ZONE 4, AHU #1 5 TON, 15 kw HEAT	#4	14
15					6720	7575					16
17	#10	50 GAL. WATER HEATER IN CEILING - FOR REAR RESTROOMS & KITCHEN	30	2	4500	5232	2	20	30 GAL. WATER HEATER IN 2ND FLR. MECH. RM. FOR FRONT RESTROOMS	#6	18
19					4500	5232					20
21	#8	BAPISTRY WATER HEATER/PUMP	40	2	2750	-	2	150	PANEL P1 - LOCATED IN ELECTRICAL CLOSET	2/0	22
23					2750	-					24
25	#6	RANGE/OVEN RECEPTACLE	50	2	3420	2750	2	40	BAPTISTRY POOL HEATER/PUMP	#6	26
27					3420	2750					28
29	#12	PTAC IN OFFICE #1	20	2	1750						30
31					1750						32
33											34
35											36
37											38
39											40
41											42

SOLID NEUTRAL / NEUTRAL WIRE (W)

TOTAL CONNECTED LOAD (VA) = 103,548

AΦ = 51,784 | BΦ = 51,764

GROUND BUS / GROUND WIRE (G)

PANEL SCHEDULE

PANEL: P1 (EQUIPMENT PANEL)
LOCATION: ELECTRIC CLOSET
FEEDER SOURCE: CLECO
VOLTAGE: 120/240V, 200A, 1Φ, 3W
ENCLOSURE: SURFACE MOUNTED, NEMA 1 PNLBD W/EQUIP GND BAR, MLO, 22000 AIC

CKT NO	THHN WIRE SIZE	LOAD DESCRIPTION / LOCATION	BREAKER AMP	BREAKER POLE	LOAD (VA)	LOAD (VA)	BREAKER POLE	BREAKER AMP	LOAD DESCRIPTION / LOCATION	THHN WIRE SIZE	CKT NO
1	#12	RECEPTACLES, EAST SIDE OF SANCTUARY, FOYER, MEN'S ROOM	20	1	360	360	1	20	AUDIO VIDEO ROOM ON 2ND FLOOR	#12	2
3	#12	RECEPTACLES, WEST SIDE OF SANCTUARY, FOYER, WOMEN'S ROOM	20	1	360	360	1	20	DEDICATED RECEPTACLE IN AUDIO VIDEO ROOM ON 2ND FLOOR	#12	4
5	#12	RECEPTACLES, 2ND FLOOR LOBBY & MECH. ROOM	20	1	360	360	1	20	RECEPTACLES IN PULPIT, CHOIR LOFT, ELEC. CLOSET	#12	6
7	#12	RECEPTACLES, CLASSROOM GRADES 1 - 3, S.E. HALL	20	1	360	360	1	20	DEDICATED RECEPTACLE IN COPY ROOM	#12	8
9	#12	RECEPTACLES, CLASSROOM GRADES 4 - 7, RECPT. NEAR MDP	20	1	360	360	1	20	RECEPTACLES IN COPY ROOM	#12	10
11	#12	RECEPTACLES, RESTROOMS IN REAR	20	1	360	360	1	20	RECEPTACLES IN PRESCHOOL/NURSERY & S.W. EXTERIOR	#12	12
13	#12	RECEPTACLES, OFFICE, CLASSROOM GRADES 8 - 12, S.W. HALL	20	1	360	360	1	20	RECEPTACLES IN ADULTS RM. & NORTH KITCHEN WALL	#12	14
15	#12	RECEPTACLES, YOUNG ADULTS, SENIOR ADULTS, S.W. EXT. RECPT., KIT. AREA OPP. WALL	20	1	360	360	1	20	RECEPTACLES IN KITCHEN	#12	16
17	#12	DEDICATED RECEPTACLE FOR REFRIGERATOR	20	1	360	1000	1	20	DEDICATED RECEPTACLE FOR MICROWAVE	#12	18
19	#12	RECEPTACLES IN STORAGE RM.	20	1	360	1000	1	20	KITCHEN RECEPTACLES, DISHWASHER, DISPOSAL	#12	20
21	#12	LIGHTS, FOYER, RESTROOMS AT FRONT ENTRANCE, 2ND FLOOR	20	1	1130	720	1	20	LIGHTS, SUNDAY SCHOOL 1 & 2	#12	22
23	#12	LIGHTS, SANCTUARY EAST SIDE	20	1	315	500	1	20	LIGHTS, EAST HALL	#12	24
25	#12	LIGHTS, SANCTUARY CENTER	20	1	135	540	1	20	LIGHTS, SUNDAY SCHOOL 3, OFFICE 2	#12	26
27	#12	LIGHTS, SANCTUARY WEST SIDE	20	1	315	960	1	20	LIGHTS, WEST HALL, CENTER HALL, COPY ROOM	#12	28
29	#12	LIGHTS, OUTDOOR FLOODLIGHTS	20	1	210	720	1	20	LIGHTS, OFFICE 1, SUNDAY SCHOOL 4	#12	30
31	#12	LIGHTS, KITCHEN	20	1	1290	270	1	20	LIGHTS, BAPISTRY, ELECTRICAL ROOM	#12	32
33	#12	LIGHTS, SUNDAY SCHOOL 5, 6, 7, ATTIC LIGHTS	20	1	1080	763	1	20	LIGHTS, RESTROOMS IN REAR OF CHURCH	#12	34
35											36
37											38
39											40
41											42

SOLID NEUTRAL / NEUTRAL WIRE (W)

TOTAL CONNECTED LOAD (VA) = 34,500

AΦ = 17,260 | BΦ = 17,240

GROUND BUS / GROUND WIRE (G)

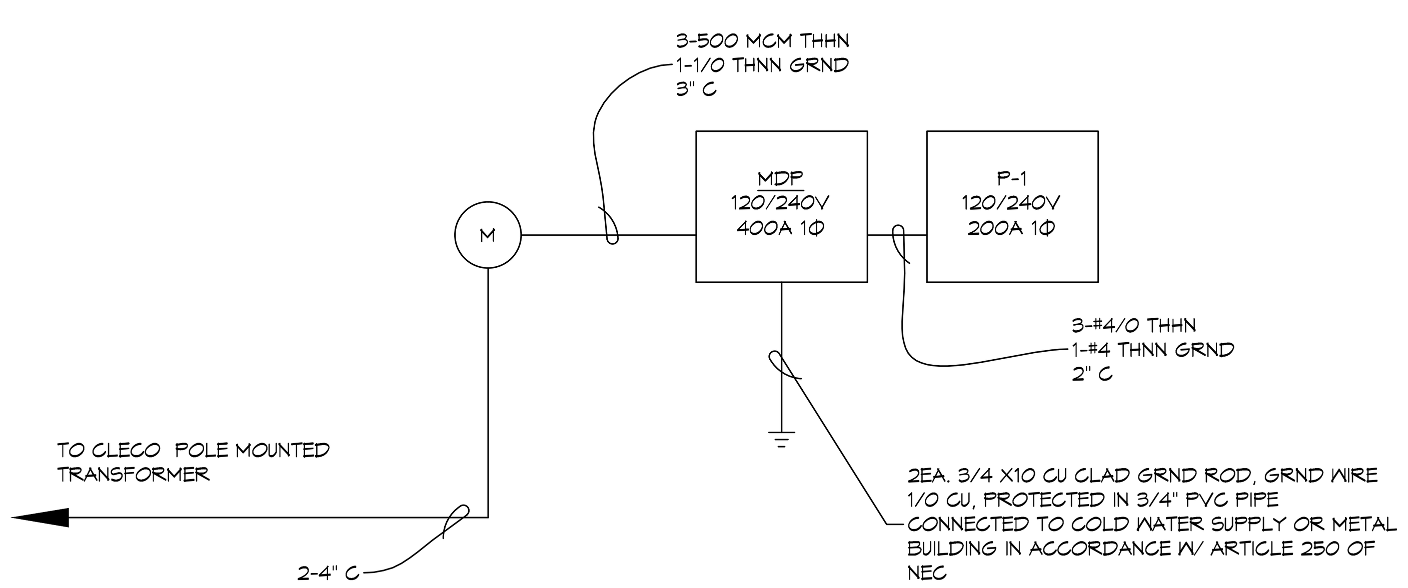

1 ONE LINE DIAGRAM
SCALE: NTS

ELECTRICAL LOAD SUMMARY

ENTERGY POWER COMPANY

PROJECT NAME: BAYOU BAPTIST CHURCH SLIDELL, LOUISIANA
PROJECT ADDRESS: 1341 SULLIVAN DRIVE
CITY/TOWN: SLIDELL, LA 70460
INTENDED USER: CHURCH MEMBERS

REQ SERV: 208 V 1 PHASE 2 WIRES
SERV ENTR SIZE: 400 AMPS
HVAC TONNAGE: 20 TONS
LARGEST MOTOR: ____ HP

(NOTE: MOTORS ABOVE 20HP MAY REQUIRE REDUCED VOLTAGE STARTING AND ARE NEVER RECOMMENDED FOR USE W/ 120/240V, 1Φ, 3W SERVICE)

TOTAL BUILDING SQ FT: 6500 SF
INDIVIDUAL UNIT SQUARE FOOTAGE: ____ SF (MULT OCCUPANCY)
INDIVUDUAL UNIT DESIGNATION: (MULT OCCUPANCY)

LOAD SOURCE	1Φ-kVA	3Φ-kVA	OR	1Φ-kW	3Φ-kW
BUILDING LIGHTING					
ELECTRIC WATER HEATING					
HEAT PUMPS					
SUPPLEMENTAL HEAT SYSTEMS					
AIR COND CONDENSING UNITS					
ELEC HEATING (PRIMARY) - AHU's					
COOKING					
REFRIGERATION					
RECEPTACLES (STANDARD)					
RECEPTACLES (COMPUTER)					
TOTAL MOTORS (EXCLUDE HVAC)					
EXTERIOR LIGHTING					
MISCELLANEOUS - CEILING FANS					
OTHER (SPECIFY)					

DAMMON ENGINEERING, INC.
LOUISIANA & MISSISSIPPI
Chief Engineer: Brian Mistich, PE
554 Old Spanish Trail
Slidell, LA 70458
www.dammonengineering.com
info@dammonengineering.com
PH: 985.649.5832 F: 985.641.5950

#	DESCRIPTION	DATE
	REVISIONS	

SEAL:

RENOVATION
BAYOU BAPTIST CHURCH
1341 SULLIVAN DR.
SLIDELL, LA 70460

JOB No: 2274 DATE: 2/2/1016
DRAWN BY: WHM CHECKED BY: CKD

The above drawings and specifications, designs and arrangements represented thereby are and shall remain the property of Dammon Engineering, and no part thereof shall be copied, disclosed to others, or used in connection with any work or project other than the specific project for which the have been prepared and developed without written consent of Dammon Engineering. Visual contact with these drawings or specifications shall constitute conclusive evidence of acceptance of these restrictions.

SHEET TITLE:
ELECTRICAL PANEL SCHEDULE, ONE-LINE DIAGRAM & LOAD SUMMARY

DRAWING NUMBER:
E103

SHEET No: 1 of #