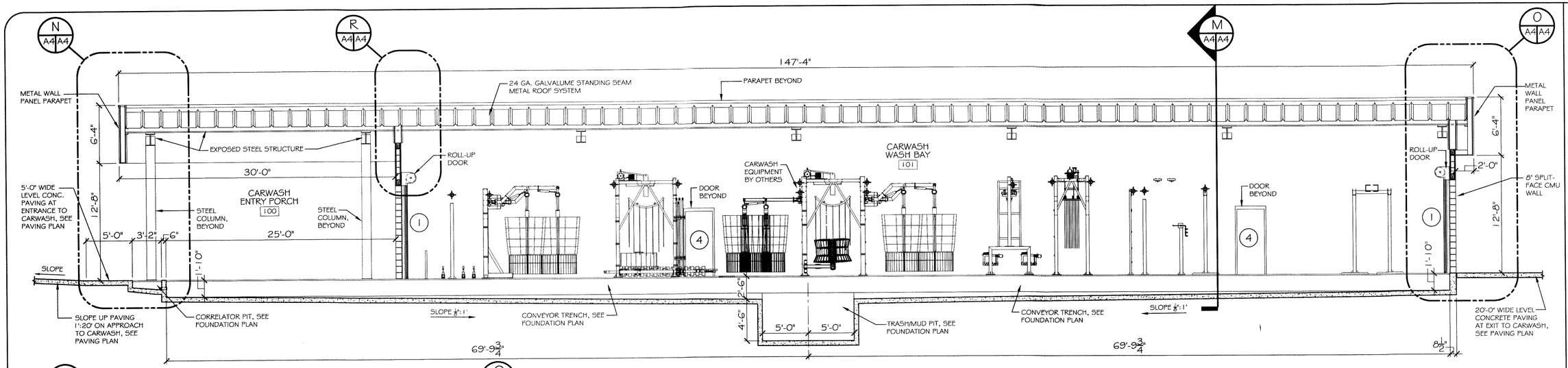

BUILDING SECTION L (A1 A4)
SCALE: 3/16"=1'-0"

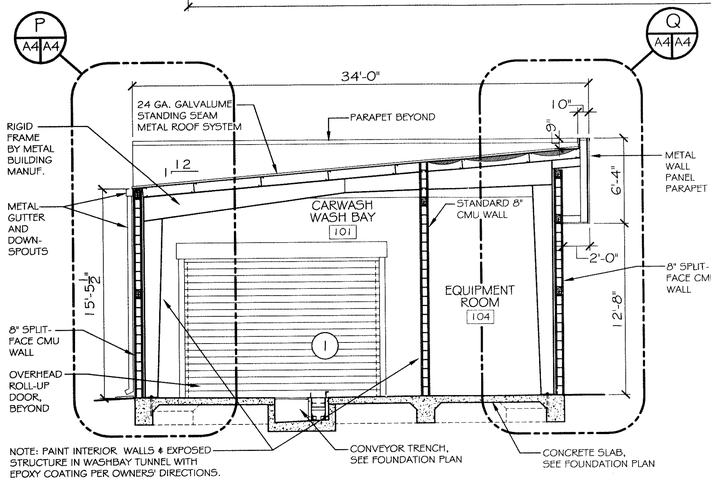

BUILDING SECTION M (A4 A4)
SCALE: 3/16"=1'-0"

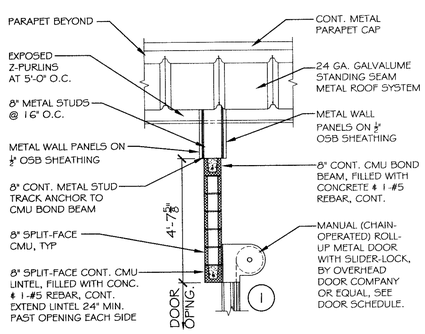

WALL SECTION R (A4 A4)
SCALE: 3/8"=1'-0"

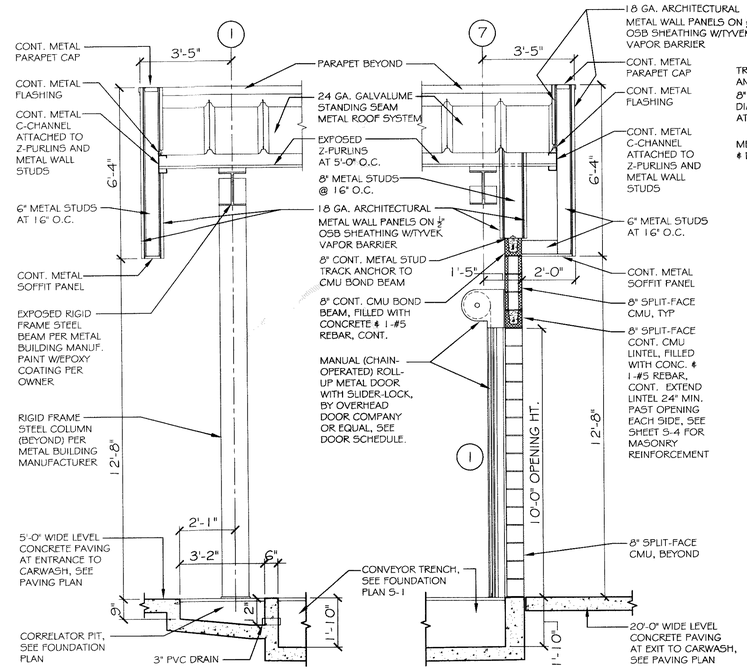

WALL SECTION N (A4 A4)
SCALE: 3/8"=1'-0"

WALL SECTION O (A4 A4)
SCALE: 3/8"=1'-0"

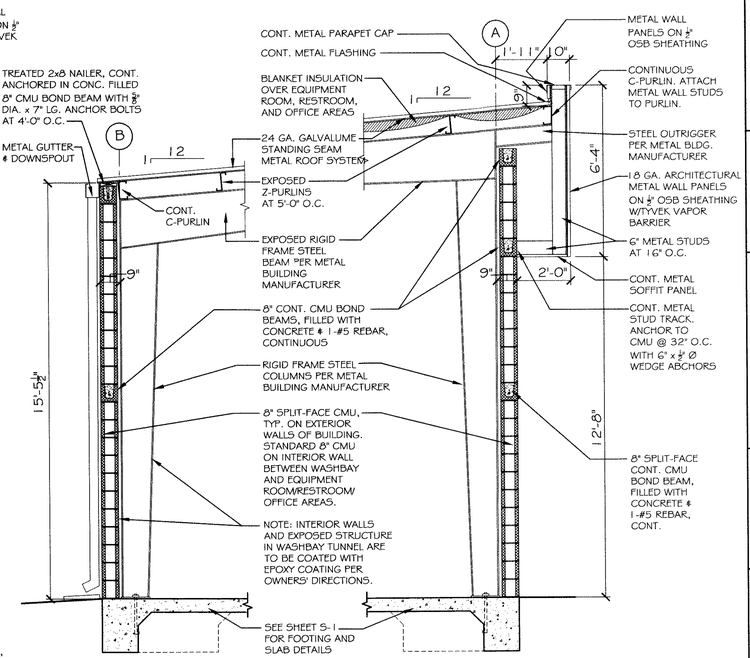

WALL SECTION P (A4 A4)
SCALE: 3/8"=1'-0"

WALL SECTION Q (A4 A4)
SCALE: 3/8"=1'-0"

392868
REVIEWED FOR STATE FIRE MARSHAL AS PER REVIEW LETTER
BY: WILLIAM D. JONES, ARCHITECT, CBO

DAMMON ENGINEERING, INC.

CHIEF ENGINEER
EMMETT DAMMON, P.E.

CHIEF ARCHITECT
ROBERT WILTSE

1095 FLORIDA AVENUE
SLIDELL, LA. 70458
OFFICE: 985-649-5832
FAX: 985-641-5950

WEBSITE:
WWW.DAMMONENGINEERING.COM

EMAIL:
DAMMONENG@BELLSOUTH.NET

ARCHITECTURE
ENGINEERING
STUDIES
PLANNING
INVESTIGATION
EXPERT WITNESS

RAIN FOREST CARWASH

3017 PONTCHARTRAIN DRIVE
SLIDELL, LA
70458

BUILDING & WALL SECTIONS

REV:

SCALE: AS NOTED
JOB#: 2085
DATE: 01-17-11
SHEET 19

A-4

OF 25