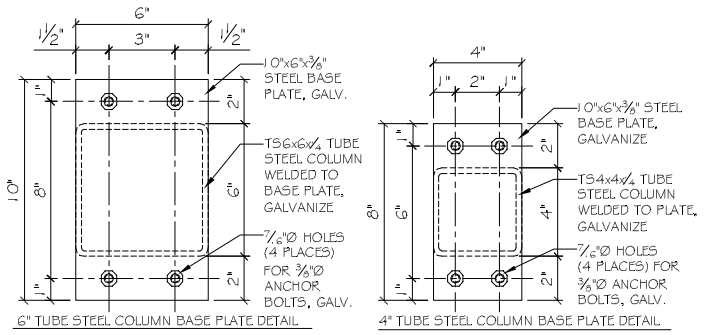

COLUMN BASE PLATES DETAIL

SCALE: 3" = 1'-0"

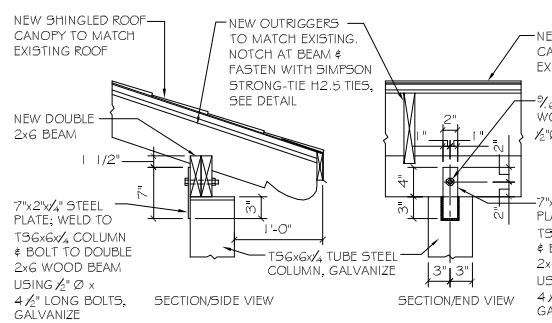

COLUMN TO BEAM ANCHOR DETAIL

SCALE: N.T.S.

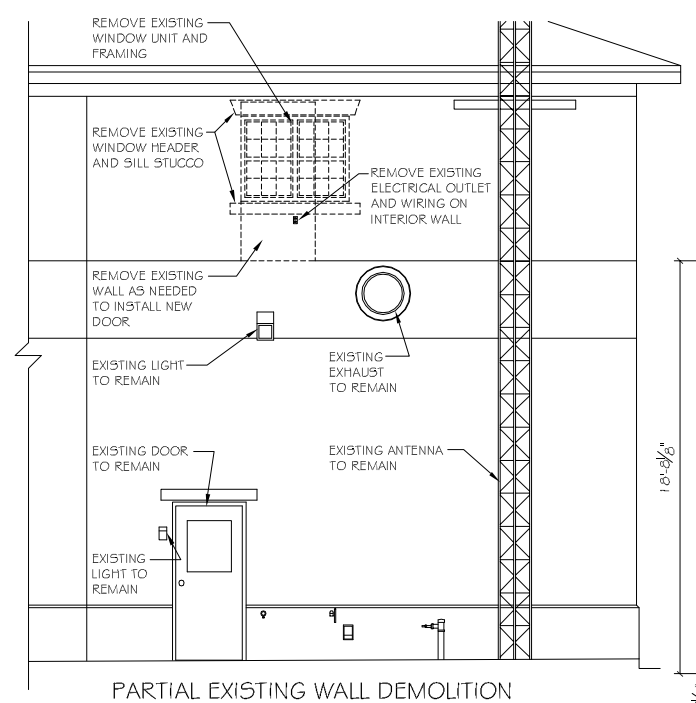

PARTIAL EXISTING WALL DEMOLITION

SCALE: 1/4"=1'-0"

NOTE: FIELD VERIFY ALL DIMENSIONS PRIOR TO CONSTRUCTION.

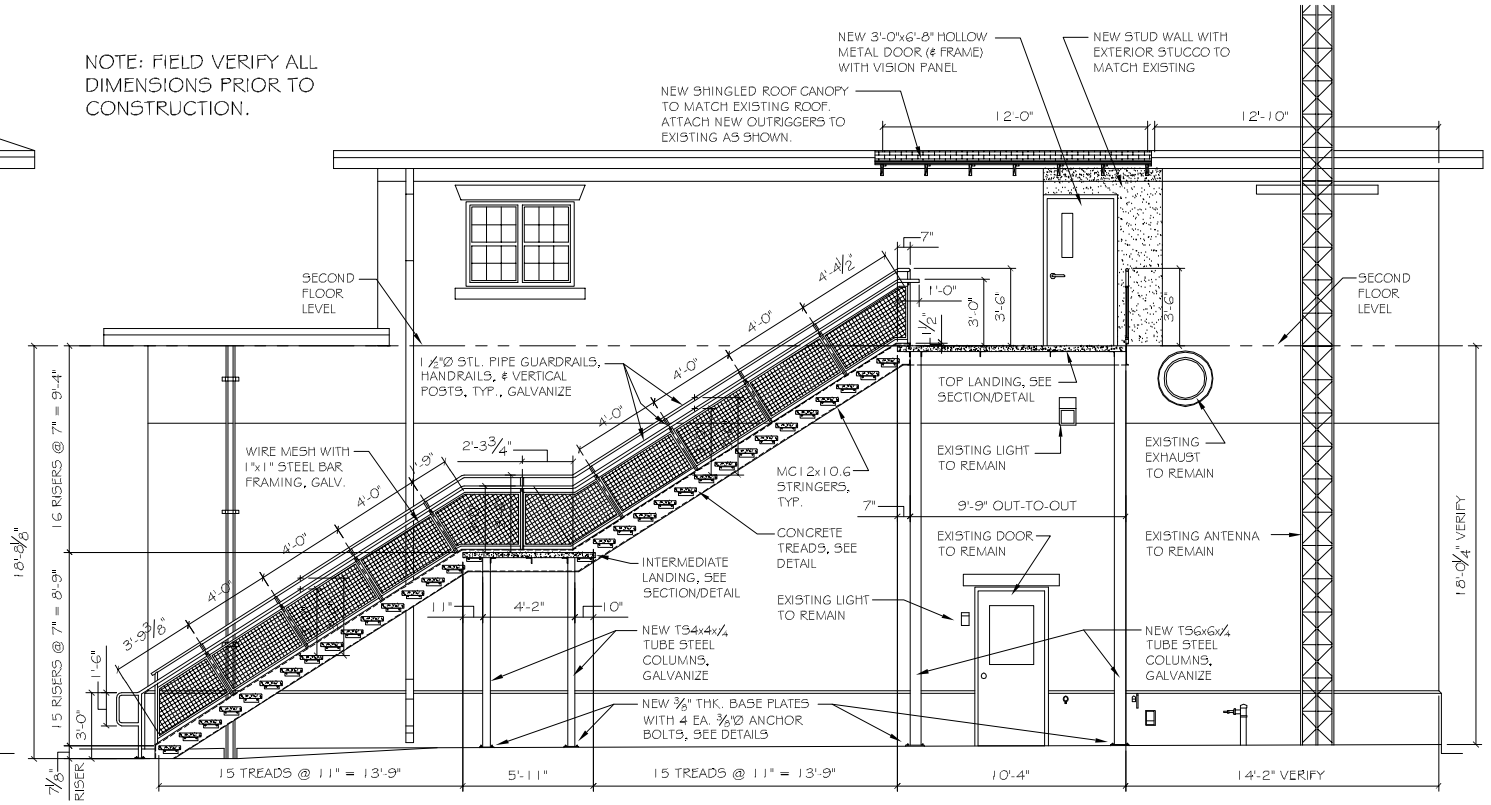

NEW STAIRS - SECTION

SCALE: 1/4"=1'-0"

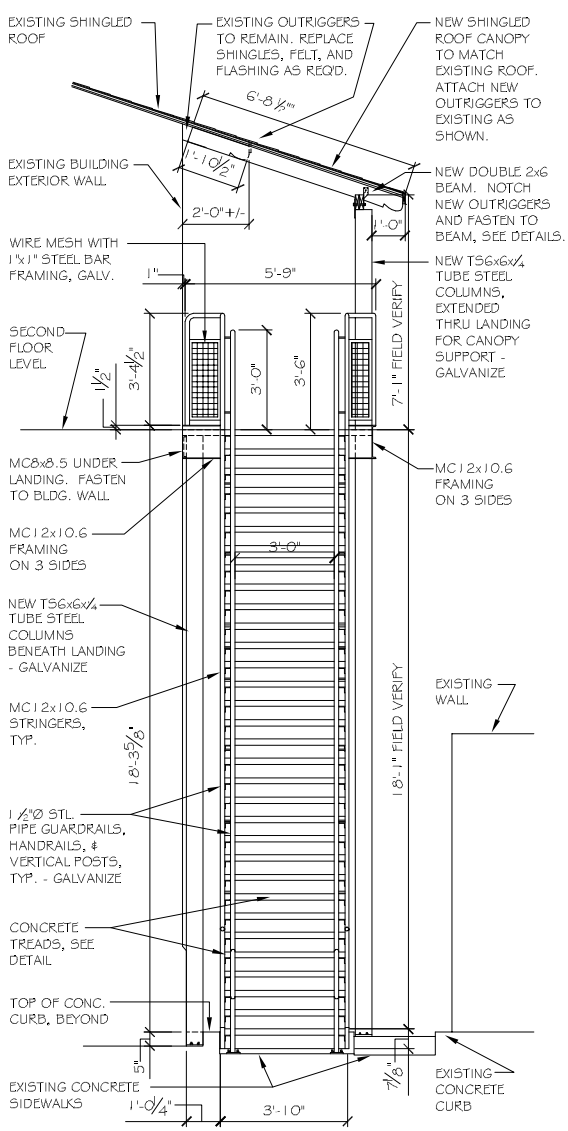

NEW STAIRS ELEVATION

SCALE: 3/8"=1'-0"

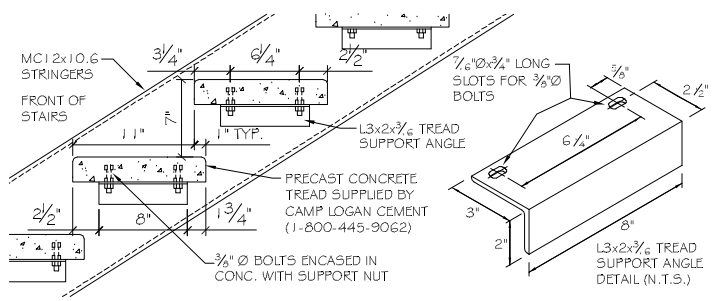

TYPICAL TREAD DETAIL

SCALE: 1-1/2"=1'-0"

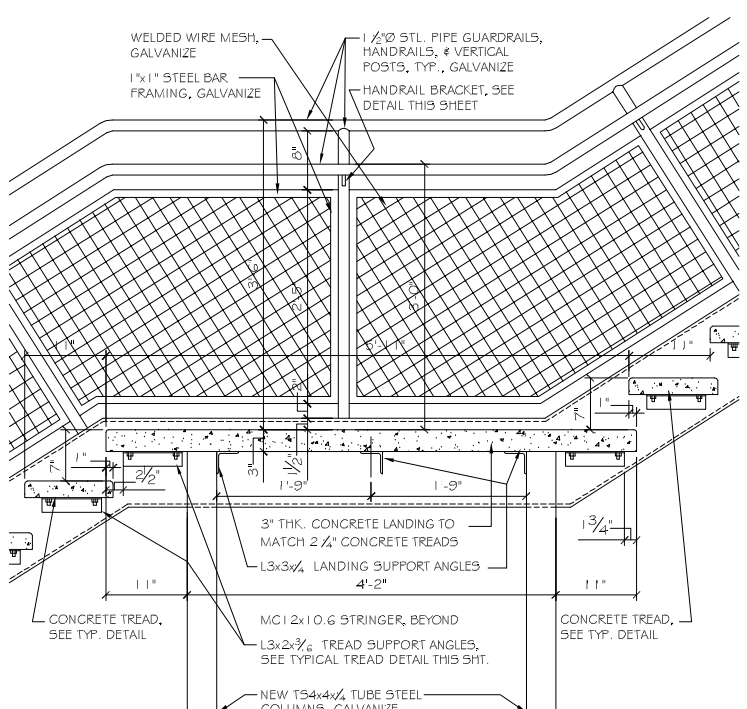

SECTION THRU INTERMEDIATE LANDING

SCALE: 1"=1'-0"

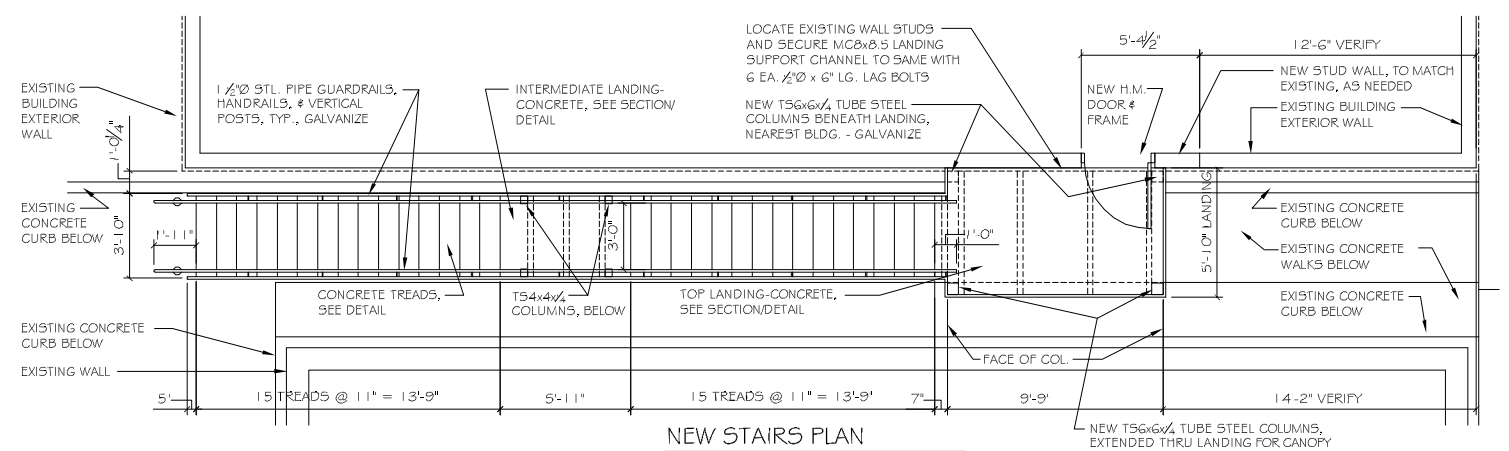

NEW STAIRS PLAN

SCALE: 1/4"=1'-0"

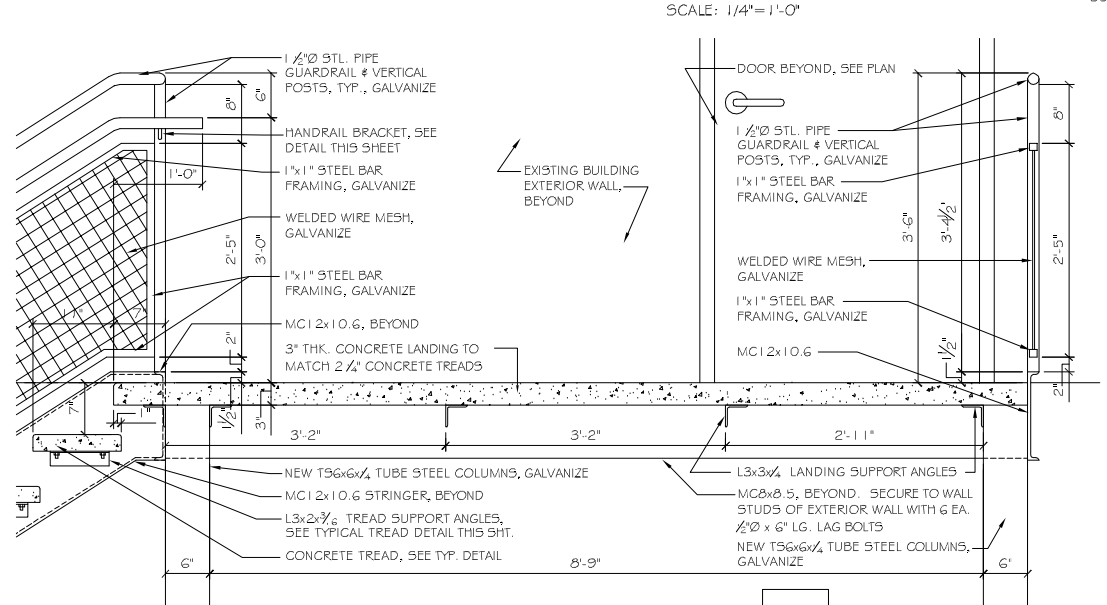

SECTION THRU TOP LANDING

SCALE: 1"=1'-0"

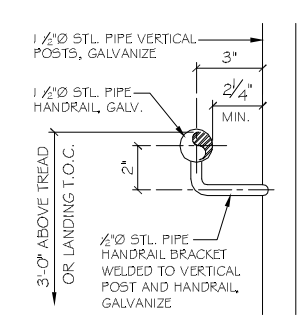

TYPICAL HANDRAIL DETAIL

SCALE: 3"=1'-0"

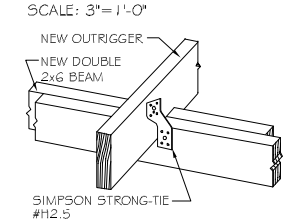

OUTRIGGER TO BEAM ANCHOR DETAIL

SCALE: N.T.S.

DAMMON ENGINEERING, INC.
Architects & Engineers
dammoneng@eblox.net
PHONE: 985-649-5032
FAX: 985-649-5953
CHIEF ENGINEER: EMMETT DAMMON, P.E.
CHIEF ARCHITECT: KEVIN KINCHEN
554 OLD SPANISH TRAIL
SLIDELL, LA 70458

Plans and specifications, and all other instruments of service, are the property of Dammon Engineering, Inc. and are not to be used for any purpose other than the specific project for which they were prepared and delivered. Reproduction, publication or use by others is prohibited. Written dimensions shall have precedence over scaled dimensions. Contractors shall verify and be responsible for all dimensions and conditions on the job. Dammon Engineering, Inc. shall be notified of any variations from the dimensions and conditions shown by these plans.

FIRE STATION # 14
NEW STAIRS ADDITION

322 FOUSCHONKEN STREET
SLIDELL LA 70458

JOB No:	DATE: 01-08-2013
2159	
DRAWN BY: JTL	CHECKED BY:

#	DESCRIPTION	DATE

REVISIONS

WALL DEMO; STAIRS PLAN, SECTION, & DETAILS

SHEET No: A1 OF