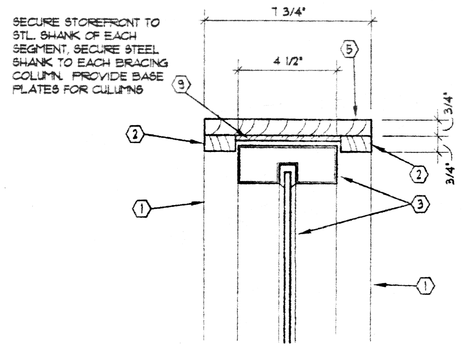

4/C DETAIL
SCALE: 3 = 1'-0"

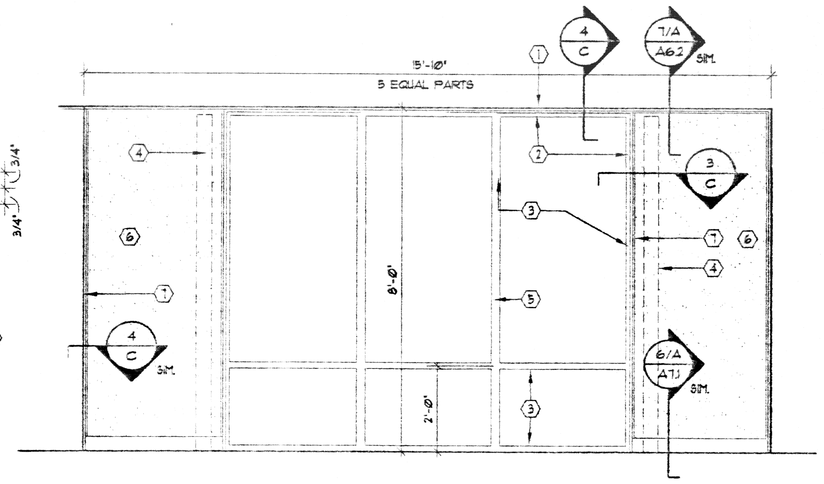

2/C ELEVATION
SCALE: 1/2" = 1'-0"

DRAWING NOTES (C)

1. CURVED TOP TRIM-BENT LD. LAMINATION. PAINT ALL EXPOSED EDGES P-3.
2. WOOD STOPS TO MATCH CAP.
3. ALUM. STOREFRONT W/ 1/4" CLEAR GLAZING.
4. STEEL TUBE SUPPORT
5. END CAP TO MATCH TOP.
6. GYP. BD.
7. FLEXIBLE PLASTIC CHANNEL MOULDING, WHITE FINISH.
8. 1/2" FURRING @16" O.C.
9. 1/4" STL. PLATE AT TOP OF EACH SEGMENT

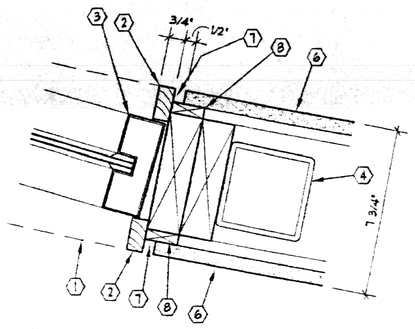

3/C DETAIL
SCALE: 3 = 1'-0"

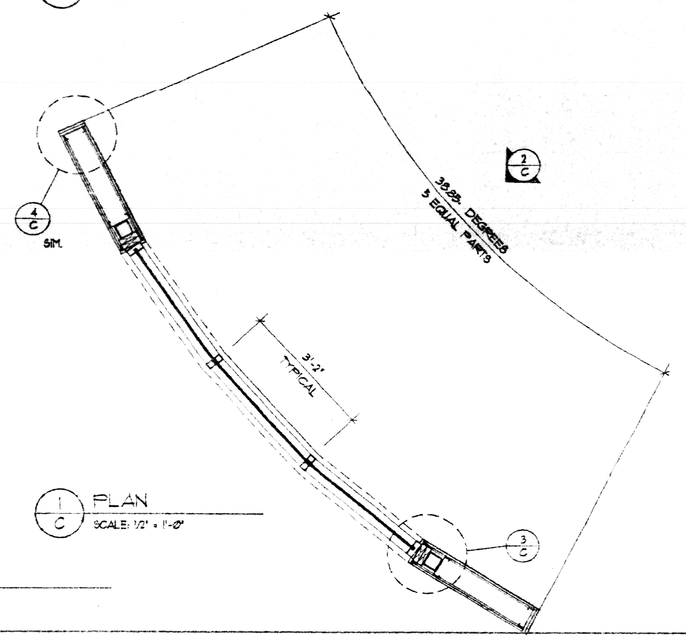

1/C PLAN
SCALE: 1/2" = 1'-0"

C/A6.3 MGR. OFFICE WALL
SCALE: AS NOTED

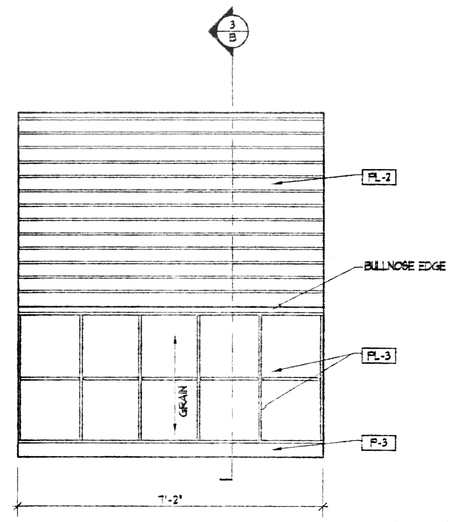

2/B ELEVATION
SCALE: 1/2" = 1'-0"
CONFORM FIXTURE ELEVATION TO INTERIOR ELEVATION 5/A6.3, V.I.F.

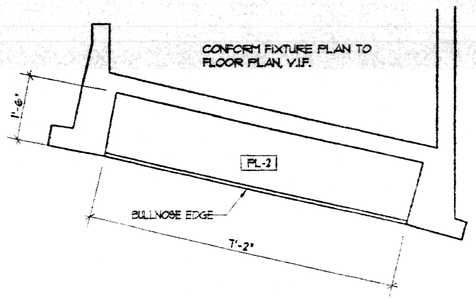

1/B PLAN
SCALE: 1/2" = 1'-0"

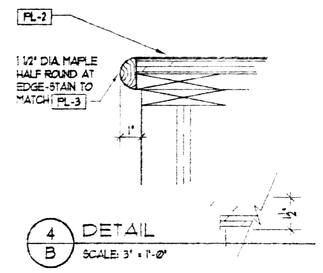

4/B DETAIL
SCALE: 3" = 1'-0"

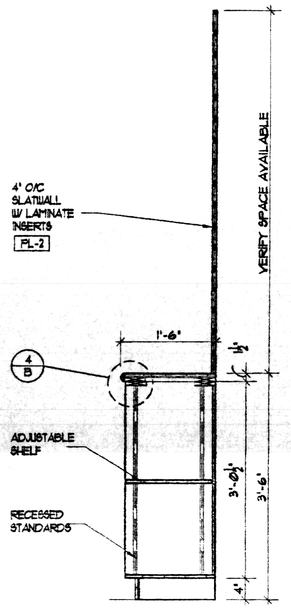

3/B SECTION
SCALE: 3/4" = 1'-0"

B/A6.3 ACCESSORY PARTS DISPLAY
SCALE: AS NOTED

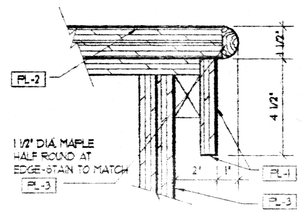

2/A DETAIL
SCALE: 3" = 1'-0"

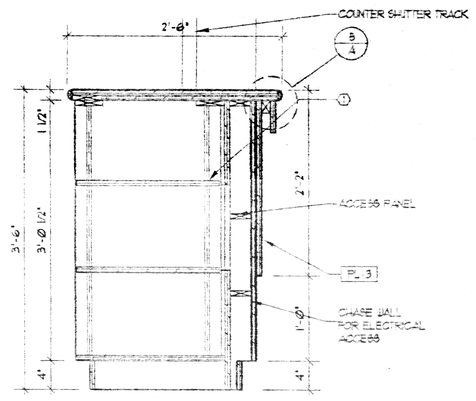

1/A SECTION
SCALE: 1" = 1'-0"

SYMBOL LEGEND

(#)	NOTE DESIGNATOR - REFER TO DRAWING NOTES FOR EACH SECTION
G-X	GRAPHICS DESIGNATOR - REFER TO SHEET --
F-#	FINISH DESIGNATOR - REFER TO INTERIOR FINISH SCHEDULE ON SHT. -1
1/R-X	DETAIL DESIGNATOR - REFER TO DETAIL "1" ON SHEET R-X

DRAWING NOTES

1. ADJUSTABLE SHELVES AND RECESSED STANDARDS
2. GYP. BD. SOFFIT FOLLOW COUNTER CONTOUR
3. DOWN LIGHTS

SEE SHEETS A5.1, A5.2, AND A5.3 FOR PLANS AND ELEVATIONS OF CASHIER AND RETAIL PARTS COUNTERS

A/A6.3 RETAIL PARTS COUNTER
SCALE: AS NOTED

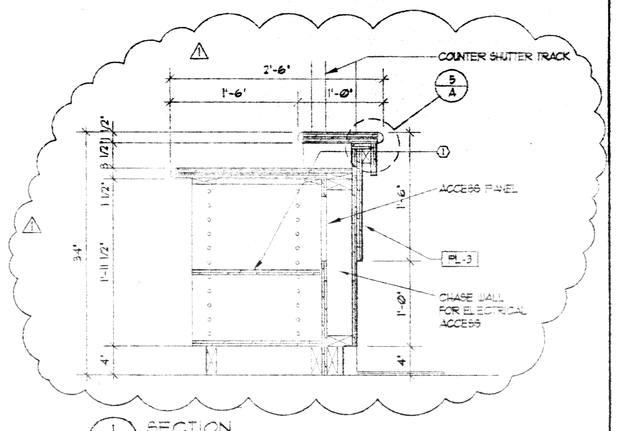

1/E SECTION
SCALE: 1" = 1'-0"

SEE SHEETS A5.1, A5.2, AND A5.3 FOR PLANS AND ELEVATIONS OF CASHIER AND RETAIL PARTS COUNTERS

E/A6.3 CASHIER COUNTER
SCALE: AS NOTED

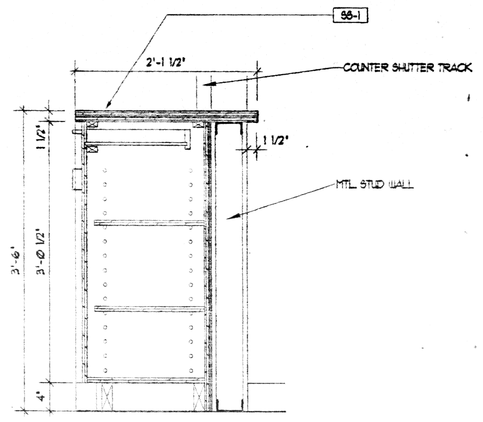

2/D SECTION
SCALE: 1" = 1'-0"

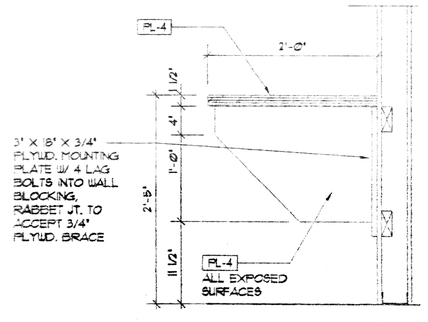

3/D SECTION
SCALE: 1" = 1'-0"

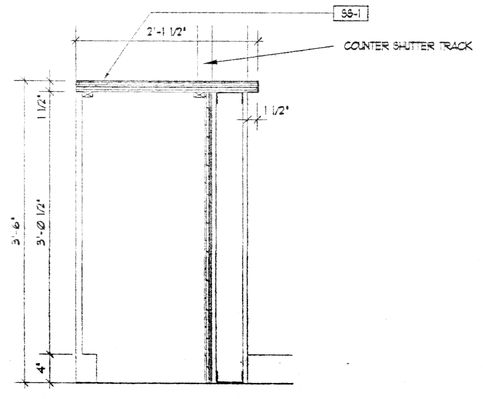

1/D SECTION
SCALE: 1" = 1'-0"

D/A6.3 TECH PARTS COUNTER
SCALE: AS NOTED

THOMAS PARTNERSHIP
ARCHITECTURE-PLANNING
3000 SOUTH VINE STREET, DENVER, COLORADO 80210 PHONE (303) 589-7504 FAX (303) 691-0790

HONDA OF SLIDELL
NEW FACILITY
SLIDELL, LA.

1 RESUBMITTAL	3/10/03
DATE:	2/12/03
DRAWN BY:	
SCALE:	AS NOTED
JOB NUMBER:	2002.1
DRAWING TITLE:	HONDA MILLWORK

A6.3