NOTE: ALL GREY IRON CASTINGS FOR MANHOLES AND CATCH-BASINS OF ALL TYPES SHALL CONFORM TO THE REQUIREMENTS OF A.S.T.M. A-48, CLASS 30 AND SHALL BE FURNISHED WITHOUT PAINT. (M306-891)

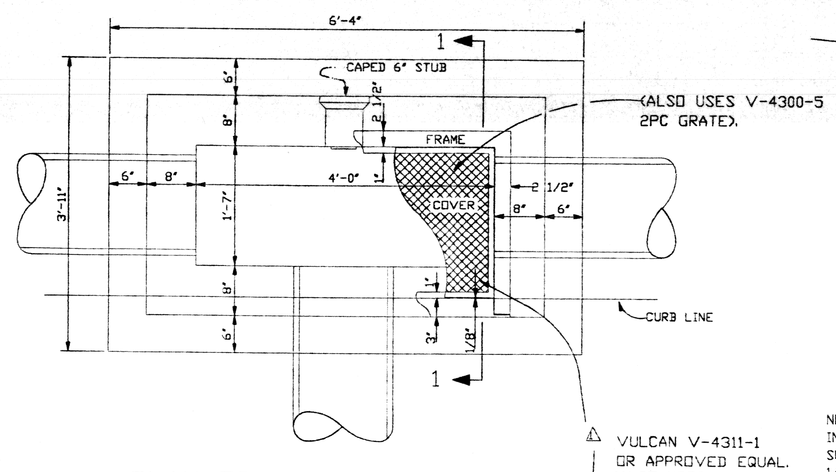

PLAN OF TYPE 1 CATCH BASIN

WHEN BARRIER CURB IS USED, FRONT OF CURB AND CATCH BASIN GRATE/FRAME SHOULD BE IN SAME LONGITUDINAL ALIGNMENT.

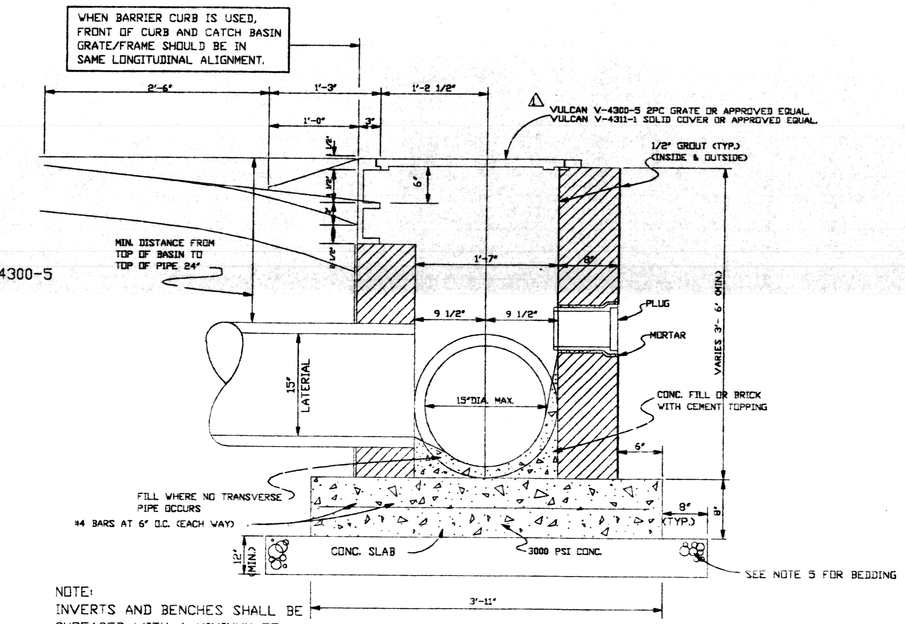

NOTE:
INVERTS AND BENCHES SHALL BE SURFACED WITH A MINIMUN OF 1/2" LAYER OF CEMENT MORTAR.

TYPE 1 CATCH BASIN SECTION 1

NOTES

1-CONCRETE STRENGHT TO BE 3'000 PSI (MIN.) AT 28 DAYS.

2-WHEN BOX IS 7'-0" OR LESS IN HEIGHT, USE ONE LAYER OF BRICK. WHEN BOX'S HEIGHT IS GREATER THAN 7'-0" BUT LESS THAN 12'-0" USE TWO LAYERS OF BRICK.

3-ALL MASONRY TO BE LAID WITH RUNNING BOND AND HEADER COURSE (EVERY FOURTH LAYER).

4-ALL WALLS TO BE PLASTERED 1/2" THICK INSEDE AND OUTSIDE.

5-12" THICK CRUSH STONE BEDDING FOUNDATION SHALL BE REQUIRED UNDER ALL MANHOLES AND CATCH BASINS.

6-ALL CATCH BASINS AND MANHOLES GREATER THAN 4'- 0" DEEP ARE REQUIRED TO HAVE IRON STEPS.

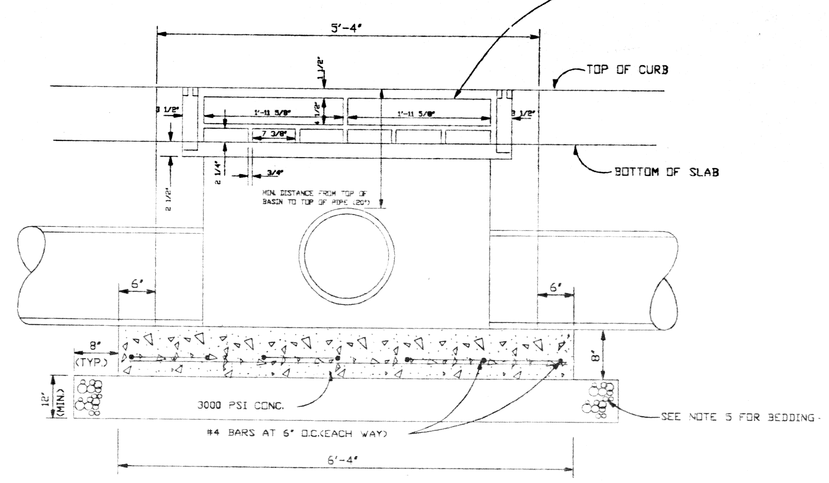

FRONT ELEVATION TYPE 1 CATCH BASIN

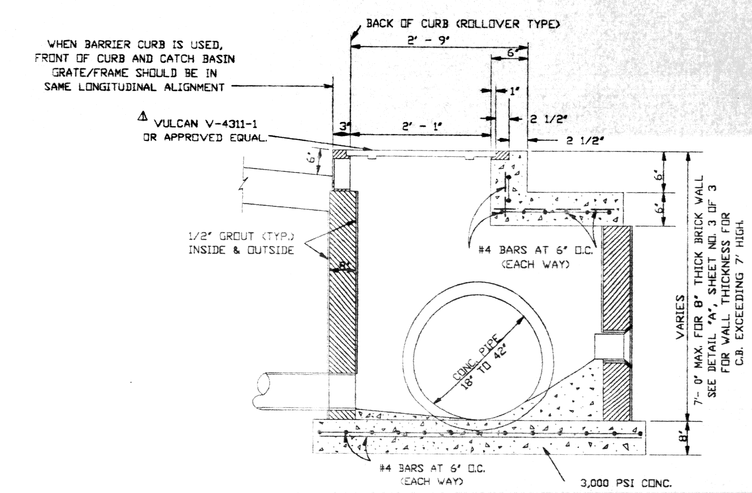

OFFSET CATCH BASIN TYPE NO. 5

DRAIN LINE BEDDING DETAILS FOR POOR SOIL CONDITIONS

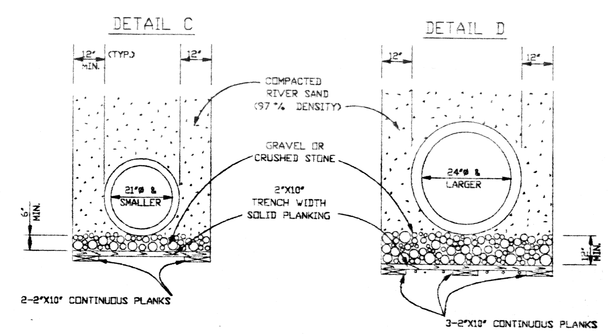

ALL DRAIN LINES

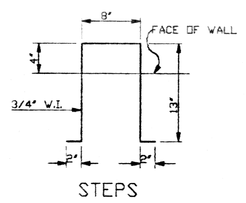

STEPS

DETAIL "B"

FOR CONSTRUCTION

ARCHITECT_____ OWNER_____ CONTRACTOR_____

DATE: 4/10/03

STATE OF LOUISIANA
MICHAEL M. HATTAWAY
REG. NO. 18572
REGISTERED PROFESSIONAL ENGINEER
CIVIL ENGINEERING

DATE	DESCRIPTION	NO.
	REVISIONS	

HONDA DEALERSHIP
LAKESHORE ESATES
ST. TAMMANY PARISH, LA.

DRAINAGE DETAILS

KREBS,LaSALLE,LeMIEUX, CONSULTANTS, INC.
ENGINEERING • PLANNING • SURVEYING • HYDROLOGY • ENVIRONMENTAL
3013 27TH STREET METAIRIE, LA. 70002 (504)837-9470
2107 N.CAUSEWAY BLVD. SUITE F, MANDEVILLE, LA. 70448 (504)624-5125

DATE: OCTOBER [ ] 2002	SCALE: 1" = 30'	DRAWING NO. 10 OF 14
DESIGNED BY:	DRAWN BY: J.L.R.	
CHECKED BY:	CHECKED BY: C.A.L.	APPROVED BY: