FOUNDATION NOTES

1. ALL DIMENSIONS ARE EDGE OF CONCRETE (EOC) TO EDGE OF CONCRETE (EOC) UNLESS NOTED OTHERWISE.
2. VERIFY ALL PLUMBING ROUGH-IN LOCATIONS ON ARCHITECTURAL DWGS.
3. CONCRETE MIX SHALL HAVE A MINIMUM COMPRESSIVE STRENGTH OF 3000 PSI AT 28 DAYS. CONCRETE MIX SHALL BE IN ACCORDANCE WITH ACI-318.
4. ALL CONVENTIONAL REINFORCING STEEL SHALL MEET ASTM-A615 (GRADE 60).
5. ONE LAYER OF POLYETHYLENE VAPOR BARRIER SHALL BE PLACED UNDER ALL CONCRETE. VAPOR RETARDER TO BE MINIMUM 10 MIL THICKNESS; ASTM E 1745 CLASS A, PERMEANCE LESS THAN 0.01 PERMS, EQUAL TO STEGO INDUSTRIES STEGO WRAP, ECOSHIELD-E 15 MIL BY EPRO, OR IRONBAR 15 BY FLATIRON FILMS. PROVIDE APPROPRIATE ACCESSORIES FOR A COMPLETE SYSTEM.
6. ALL REINFORCING STEEL AND MESH SHALL BE SECURELY SUPPORTED TO PREVENT BOTH VERTICAL AND HORIZONTAL MOVEMENT DURING CONCRETE PLACEMENT.
7. THE CONTRACTOR SHALL VERIFY ALL DROPS, OFFSETS, BRICK LEDGES, DIMENSIONS AND CONFIGURATIONS. CONTRACTOR MUST BE RESPONSIBLE FOR SAME.
8. GRADE BEAM DIMENSIONS MAY VARY BY -5%, +20%.
9. ALL SOIL BELOW SLAB SHALL RECEIVE TERMITE TREATMENT.

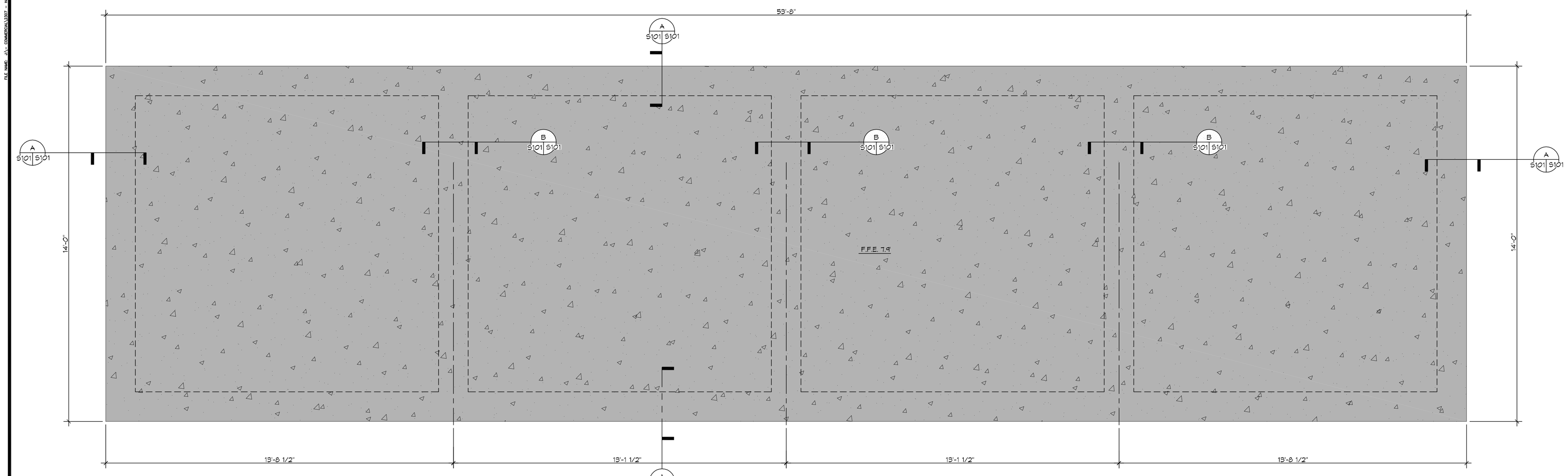

1 FOUNDATION PLAN
S101 S101
SCALE: 1/2" = 1'-0"

FOUNDATION

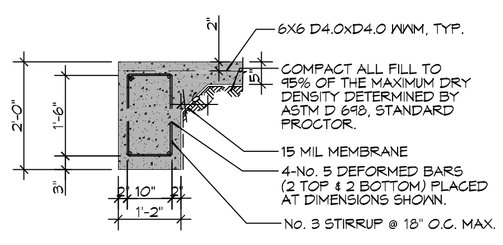

A SECTION
S101 S101
SCALE: 1/2" = 1'-0"

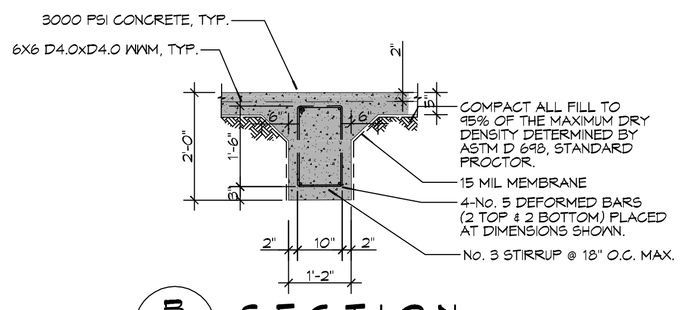

B SECTION
S101 S101
SCALE: 1/2" = 1'-0"

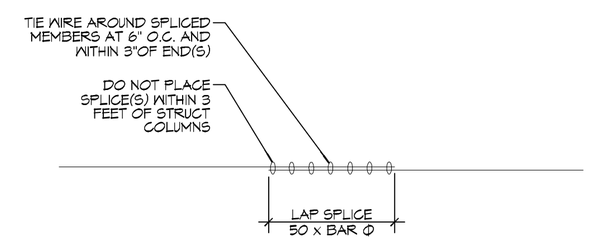

2 DETAIL
S101 S101
SCALE: 1/2" = 1'-0"

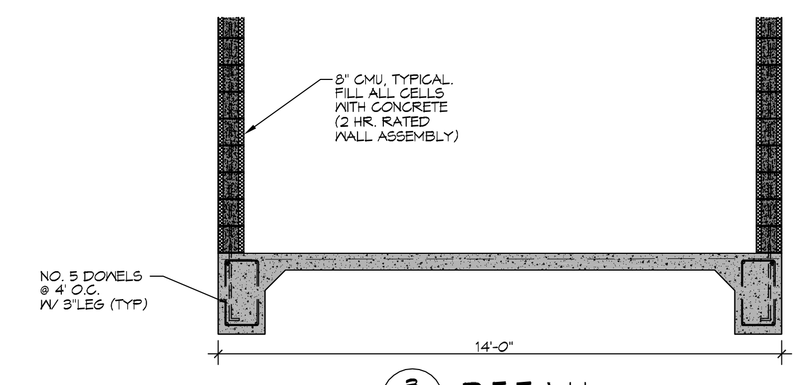

3 DETAIL
S101 S101
SCALE: 3/8" = 1'-0"

DAMMON ENGINEERING, INC.
LOUISIANA & MISSISSIPPI
www.dammonengineering.com
info@dammonengineering.com
PH: 985.649.5832
Chief Engineer: Brian Mistich, PE
554 Old Spanish Trail
Slidell, LA 70458

REVISIONS

#	DESCRIPTION	DATE

SEAL:

STORAGE BUILDING

HELENE NUNEZ

2010 FIRST STREET
SLIDELL, LA 70458

DATE:	03/17/2017
CHECKED BY:	BAM
DRAWN BY:	CKD
JOB No:	23071

THIS SHEET, ALONG WITH ALL OTHER SHEETS, FORMS AND ATTACHMENTS REPRESENTS OWNERSHIP OF INTELLECTUAL PROPERTY OF DAMMON ENGINEERING, INC. THE INFORMATION CONTAINED HEREIN IS PROPRIETARY AND CONFIDENTIAL. ANY REPRODUCTION, DISTRIBUTION, OR USE OF THIS INFORMATION WITHOUT THE EXPRESS WRITTEN CONSENT OF DAMMON ENGINEERING, TEXAS CANNOT, WITH THE EXCEPTION OF SPECIFICATIONS, BE LICENSED.

SHEET TITLE:
FOUNDATION PLAN

DRAWING NUMBER:
S101

SHEET No: 3 of 5

FILE NAME: J:\1 - COMMERCIAL\23071 - Helene Nunez Study Slides\Drawings\Contract Drawings\S101 - Foundation Plan.dwg PLOT DATE & TIME: Friday, March 17, 2017 8:15:13 AM