# FOUNDATION NOTES

1. ALL DIMENSIONS ARE EDGE OF CONCRETE (EOC) TO EDGE OF CONCRETE (EOC) UNLESS NOTED OTHERWISE.
2. VERIFY ALL PLUMBING ROUGH-IN LOCATIONS ON ARCHITECTURAL DWGS.
3. CONCRETE MIX SHALL HAVE A MINIMUM COMPRESSIVE STRENGTH OF 3000 PSI AT 28 DAYS. CONCRETE MIX SHALL BE IN ACCORDANCE WITH ACI-318.
4. ALL CONVENTIONAL REINFORCING STEEL SHALL MEET ASTM-A615 (GRADE 60).
5. ONE LAYER OF POLYETHYLENE VAPOR BARRIER SHALL BE PLACED UNDER ALL CONCRETE. VAPOR RETARDER TO BE MINIMUM 10 MIL THICKNESS; ASTM E 1745 CLASS A, PERMEANCE LESS THAN 0.01 PERMS, EQUAL TO STEGO INDUSTRIES STEGO WRAP, ECOSHIELD-E 15 MIL BY EPRO, OR IRONBAR 15 BY FLATIRON FILMS. PROVIDE APPROPRIATE ACCESSORIES FOR A COMPLETE SYSTEM.
6. ALL REINFORCING STEEL AND MESH SHALL BE SECURELY SUPPORTED TO PREVENT BOTH VERTICAL AND HORIZONTAL MOVEMENT DURING CONCRETE PLACEMENT.
7. THE CONTRACTOR SHALL VERIFY ALL DROPS, OFFSETS, BRICK LEDGES, DIMENSIONS AND CONFIGURATIONS. CONTRACTOR MUST BE RESPONSIBLE FOR SAME.
8. GRADE BEAM DIMENSIONS MAY VARY BY -5%, +20%.
9. REMOVE ANY AND ALL BAD SOIL IN FOOT PRINT AND REPLACE WITH A4 SELECT.
10. ALL SOIL BELOW SLAB SHALL RECEIVE TERMITE TREATMENT.

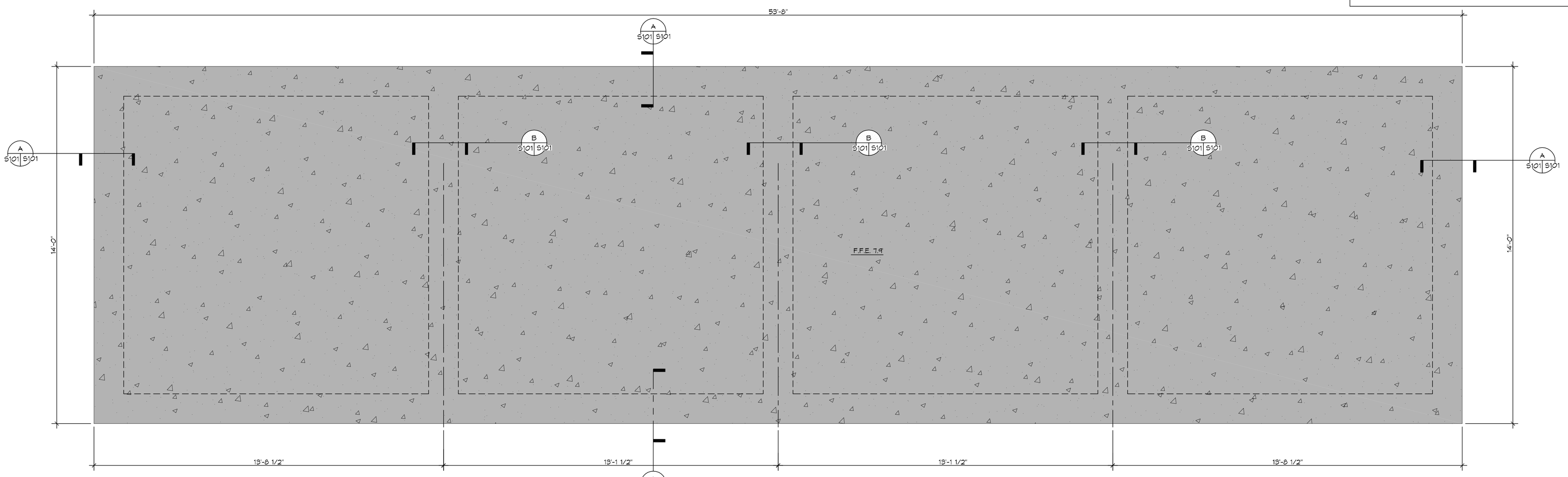


## 1 FOUNDATION PLAN
S101 S101
SCALE: 1/2" = 1'-0"

FOUNDATION

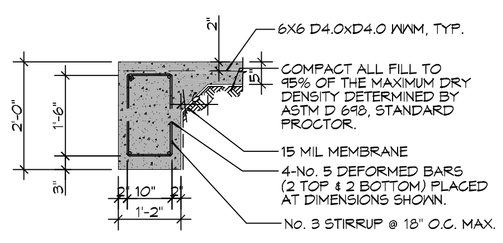


## A SECTION
S101 S101
SCALE: 1/2" = 1'-0"

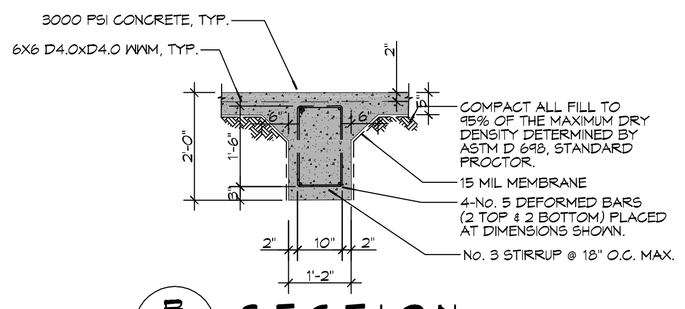


## B SECTION
S101 S101
SCALE: 1/2" = 1'-0"

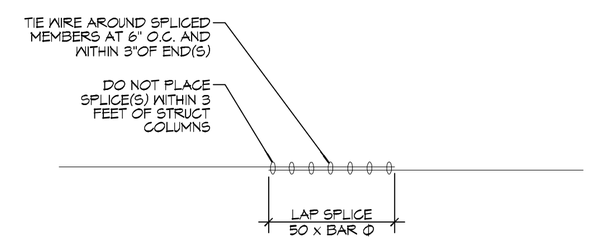


## 2 DETAIL
S101 S101
SCALE: 1/2" = 1'-0"

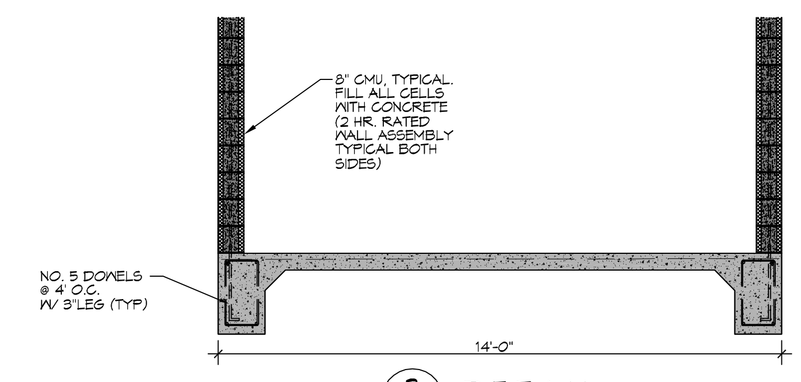


## 3 DETAIL
S101 S101
SCALE: 3/8" = 1'-0"


DAMMON ENGINEERING, INC.
LOUISIANA & MISSISSIPPI
www.dammonengineering.com
info@dammonengineering.com
Ph: 985.649.5832
Chief Engineer: Brian Mistich, PE
554 Old Spanish Trail
Slidell, LA 70458


REVISIONS

| # | DESCRIPTION | DATE |
|---|---|---|
| | | |

SEAL:

STATE OF LOUISIANA
BRIAN A. MISTICH
License No. 30187
PROFESSIONAL ENGINEER

STORAGE BUILDING

HELENE NUNEZ

2010 FIRST STREET
SLIDELL, LA 70458

| | | | |
|---|---|---|---|
| JOB No: | 23071 | DATE: | 03/17/2017 |
| DRAWN BY: | CKD | CHECKED BY: | BAM |


THE ABOVE DRAWINGS AND SPECIFICATIONS, DESIGNS AND ARRANGEMENTS REPRESENTED THEREIN ARE THE PROPERTY OF DAMMON ENGINEERING, INC. AND WERE PREPARED FOR USE ON THE PROJECT NAMED HEREIN. THEY ARE NOT TO BE USED FOR ANY OTHER PROJECT, EXTENSIONS OF THE PROJECT NAMED HEREIN OR ON OTHER PROJECTS WITHOUT THE WRITTEN AUTHORIZATION OF DAMMON ENGINEERING, INC. THE ACCEPTANCE OF THESE DRAWINGS OR SPECIFICATIONS, EVEN WITHOUT WRITTEN OBJECTION, CONSTITUTES AGREEMENT TO THE FOREGOING.


SHEET TITLE:
FOUNDATION PLAN

DRAWING NUMBER:

S101

SHEET No: 3 of 5