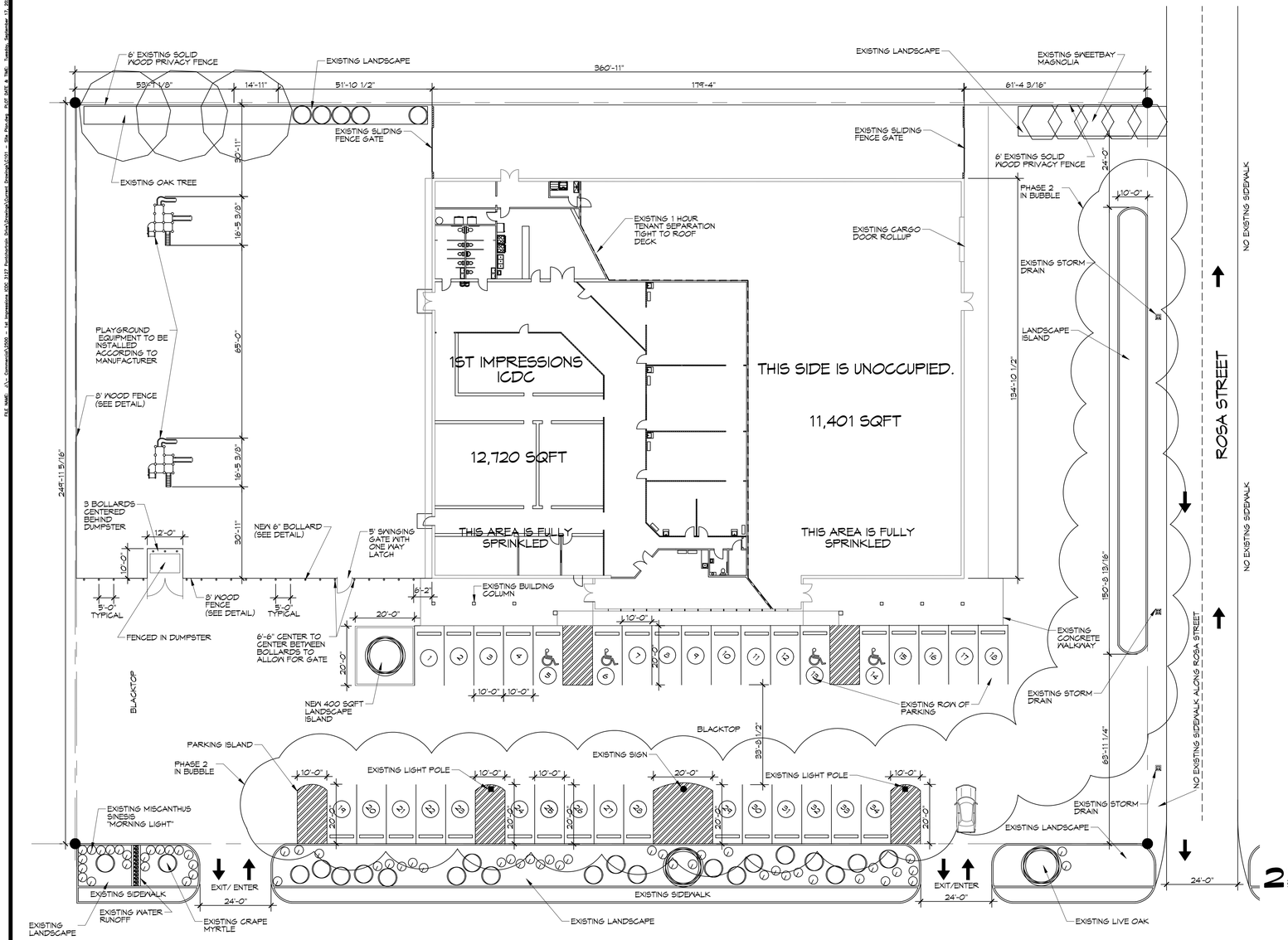

1 SITE PLAN
SCALE: 1" = 20'-0"

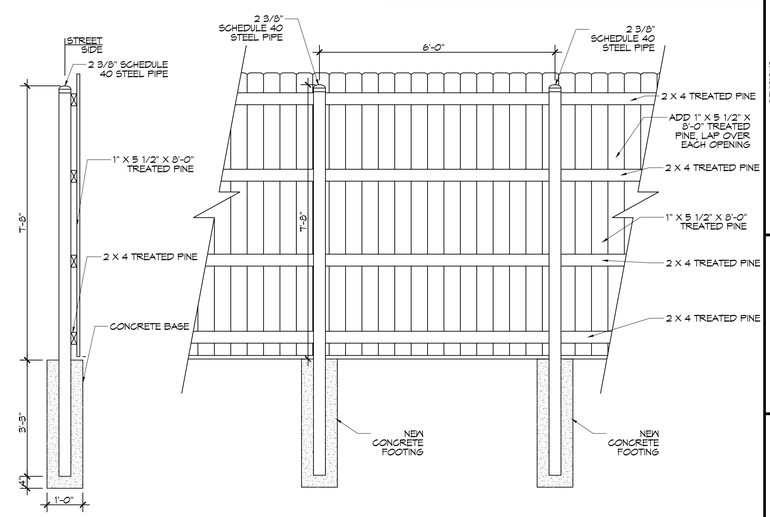

2 FENCE DETAIL
SCALE: 1/2"=1'-0"

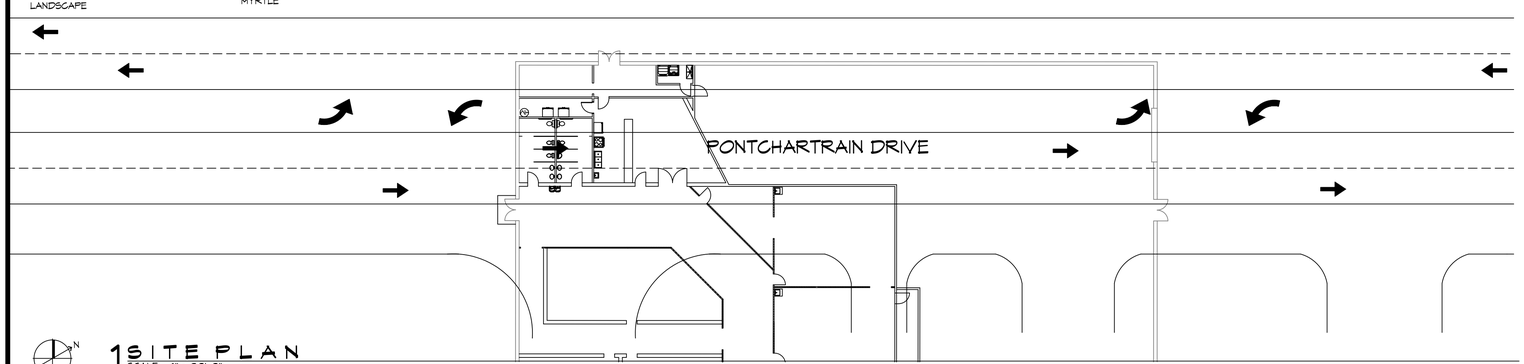

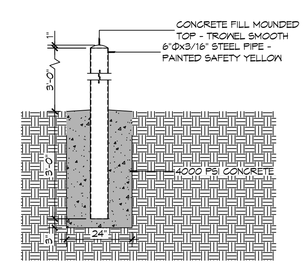

3 BOLLARD DETAIL
SCALE: 1/2"=1'-0"

PLANNING

ZONING DISTRICT - C4 HIGHWAY COMMERCIAL

FLOOD ZONE

ZONE AE ELEVATION 10.0

BUILDING SQUARE FOOTAGE

TOTAL BUILDING 24,121 SQ. F.T

PARKING REQUIREMENTS

5 CLASSROOMS
12 PARKING SPACES REQUIRED

14 REGULAR PARKING SPACES PROVIDED
4 HANDICAP PARKING SPACES PROVIDED
TOTAL PARKING SPACES PROVIDED 18

BUILDING ZONING ADJUSTMENTS

BZA 12-20

DAMMON ENGINEERING, INC.
LOUISIANA & MISSISSIPPI
www.dammonengineering.com
info@dammonengineering.com
PH: 985.649.5832
Chief Engineer: Brian Mistich, PE
554 Old Spanish Trail
Slidell, LA 70458

#	DESCRIPTION	DATE
	REVISIONS	

SEAL:

NEW DAYCARE
1ST IMPRESSIONS ICDC
3127 PONTCHARTRAIN DR.
SLIDELL, LA 70458

JOB No: 2500 | DATE: 04-17-2024
DRAWN BY: CKD | CHECKED BY: JMS

THE DAMMON ENGINEERING, INC. DRAWINGS, DESIGNS, PLANS AND SPECIFICATIONS, REGARDLESS OF THE FORM THEY ARE RECORDED, ARE THE PROPERTY OF DAMMON ENGINEERING, INC. AND SHALL REMAIN THE PROPERTY OF DAMMON ENGINEERING, INC. WHEN THE PROJECT SHALL HAVE BEEN COMPLETED, THE DRAWINGS, DESIGNS, PLANS AND SPECIFICATIONS WILL BE RETURNED TO DAMMON ENGINEERING, INC. UPON REQUEST. ALL REPRODUCTIONS AND COPIES MADE OF THE DRAWINGS, DESIGNS, PLANS AND SPECIFICATIONS, BY ANY METHOD OR FORM, WITHOUT THE EXPRESS WRITTEN CONSENT OF DAMMON ENGINEERING, INC. ARE PROHIBITED.

SHEET TITLE:
SITE PLAN

DRAWING NUMBER:
C101

SHEET No: 2 of 7