FILE NAME: J:\- Foundations or Structural Only\1566 Marina Drive Slidell\Working Folder\S100 - site Plan.dwg PLOT DATE & TIME: Monday, November 8, 2021 11:11:53 AM

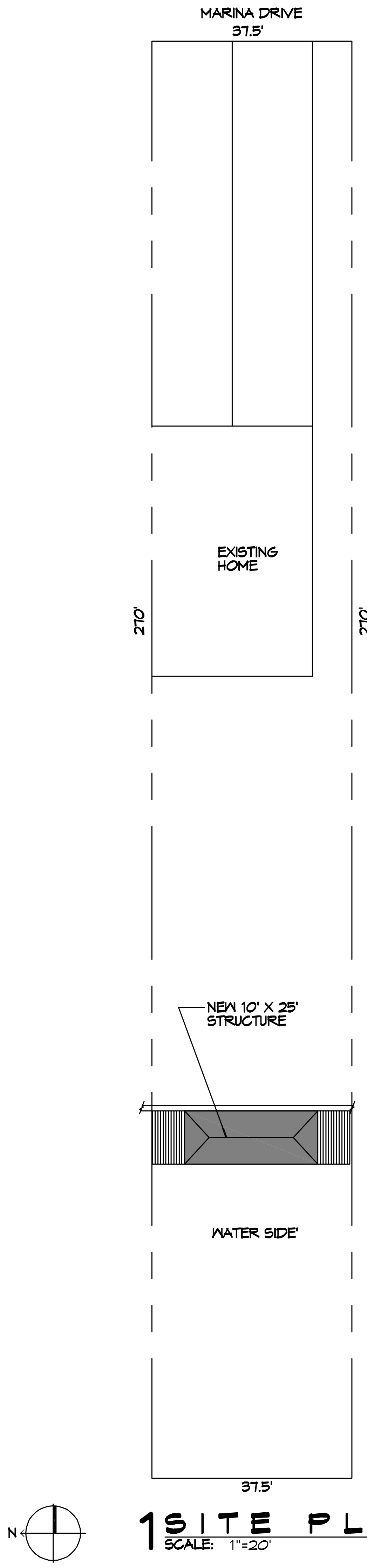

MARINA DRIVE
37.5'
EXISTING HOME
270'
270'
NEW 10' X 25' STRUCTURE
WATER SIDE'
37.5'
N

1 SITE PLAN

SCALE: 1"=20'

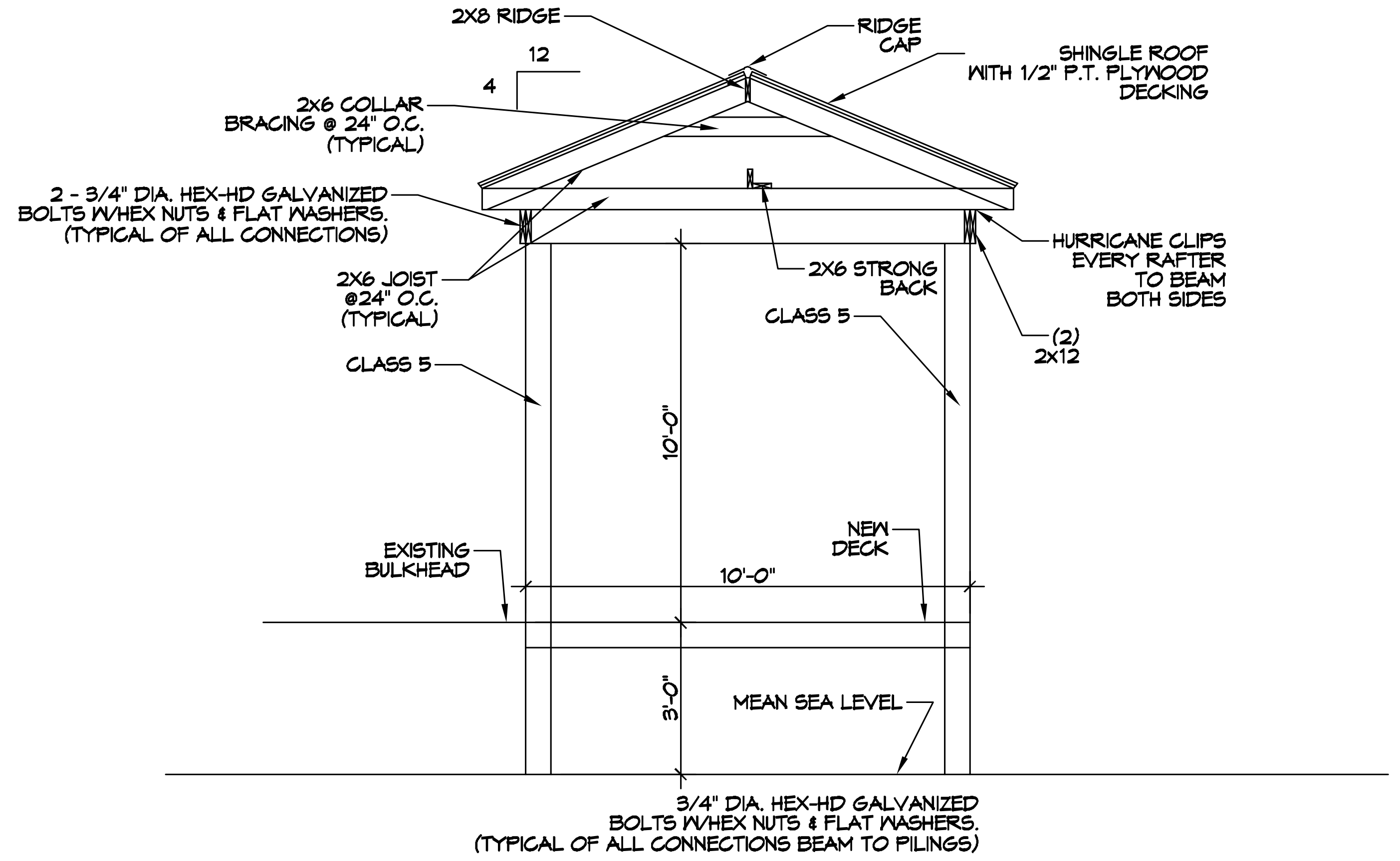

2X8 RIDGE
RIDGE CAP
SHINGLE ROOF WITH 1/2" P.T. PLYWOOD DECKING
12
4
2X6 COLLAR BRACING @ 24" O.C. (TYPICAL)
2 - 3/4" DIA. HEX-HD GALVANIZED BOLTS W/HEX NUTS & FLAT WASHERS. (TYPICAL OF ALL CONNECTIONS)
HURRICANE CLIPS EVERY RAFTER TO BEAM BOTH SIDES
2X6 JOIST @24" O.C. (TYPICAL)
2X6 STRONG BACK
CLASS 5
(2) 2x12
CLASS 5
10'-0"
EXISTING BULKHEAD
NEW DECK
10'-0"
3'-0"
MEAN SEA LEVEL
3/4" DIA. HEX-HD GALVANIZED BOLTS W/HEX NUTS & FLAT WASHERS. (TYPICAL OF ALL CONNECTIONS BEAM TO PILINGS)

BOAT HOUSE SECTION

SCALE: 1/4" = 1'-0"

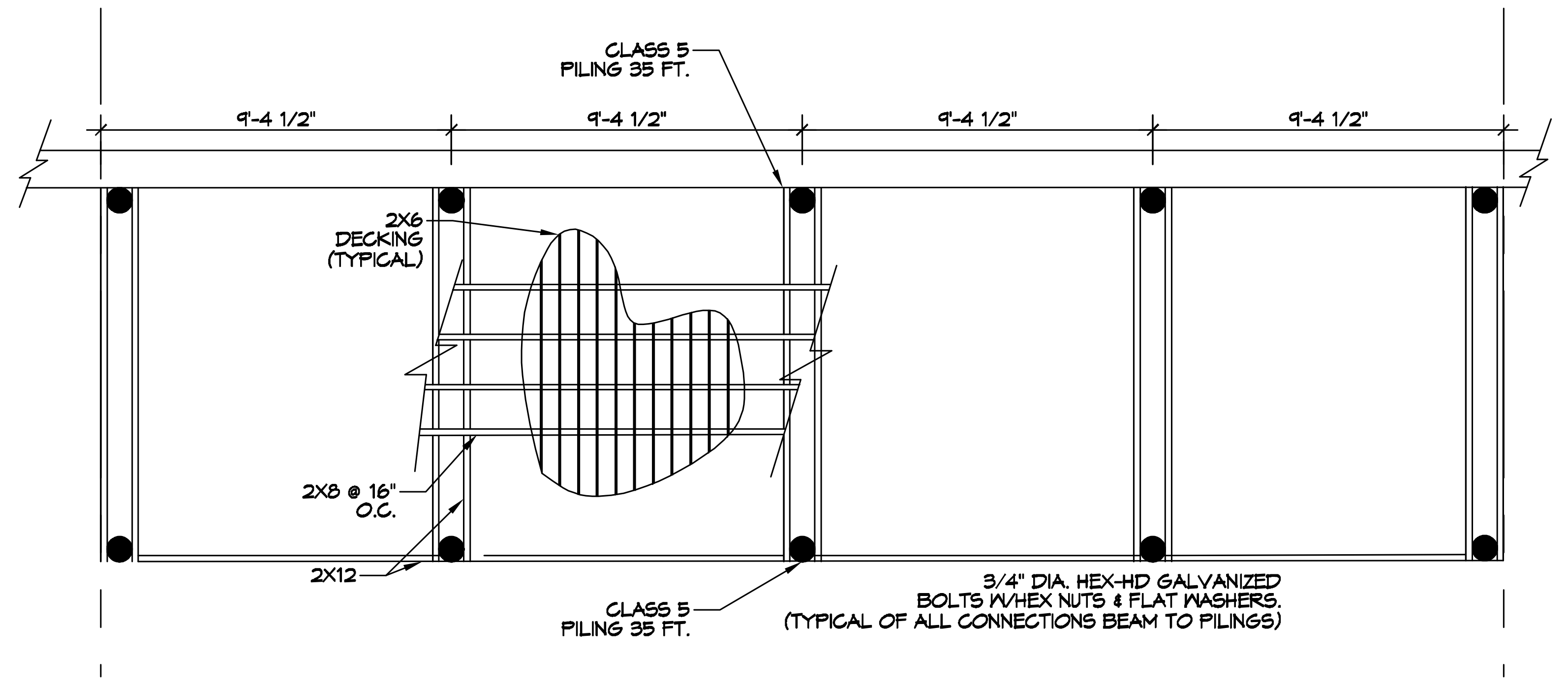

CLASS 5 PILING 35 FT.
9'-4 1/2"
9'-4 1/2"
9'-4 1/2"
9'-4 1/2"
2X6 DECKING (TYPICAL)
2X8 @ 16" O.C.
2X12
CLASS 5 PILING 35 FT.
3/4" DIA. HEX-HD GALVANIZED BOLTS W/HEX NUTS & FLAT WASHERS. (TYPICAL OF ALL CONNECTIONS BEAM TO PILINGS)

PILING / FRAMING PLAN

SCALE: 1/4" = 1'-0"

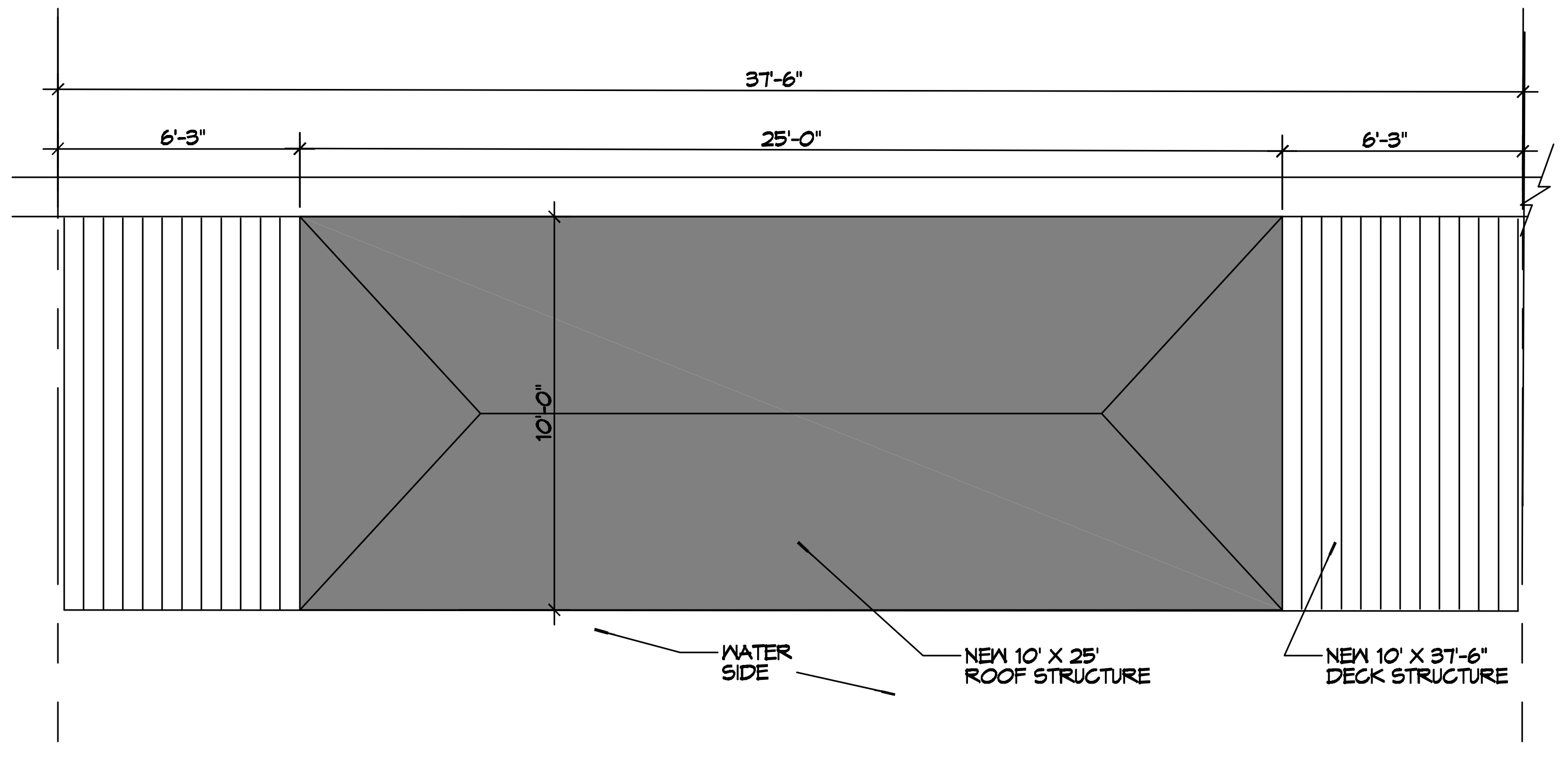

37'-6"
6'-3"
25'-0"
6'-3"
10'-0"
WATER SIDE
NEW 10' X 25' ROOF STRUCTURE
NEW 10' X 37'-6" DECK STRUCTURE

PLAN VIEW

SCALE: 1/4" = 1'-0"

GENERAL NOTES

1. PILES ARE TO BE CLASS 5 PRESSURE TREATED 35 FT. IN LENGTH WITH A 6 INCH TIP AND 8 INCH BUTT
2. ALL PILES SHALL BE DRIVEN TO REFUSAL.
3. ALL LUMBER SHALL BE PRESSURE TREATED WITH A RETENTION OF .4 PER C.F.
4. ALL FASTENERS SHALL BE HOT DIPPED GALVANIZED (HDG) PER ASTM A153.
5. WRAP ALL PILINGS.

WIND SPEED

THE CONSTRUCTION FOR SAID BOAT HOUSE, WIND SPEED IS 130 MPH. THIS DESIGN IS IN ACCORDANCE WITH: AMERICAN WOOD COUNCIL, WOOD FRAME CONSTRUCTION MANUAL FOR ONE AND TWO FAMILY DWELLINGS (WFCM) 2015 EDITION AS WELL AS THE INTERNATIONAL RESIDENTIAL CODE (IRC) 2015 EDITION.

DAMMON
ENGINEERING, INC.
www.dammonengineering.com
info@dammonengineering.com
Fax: 985.641.5950
554 Old Spanish Trail
Slidell, LA 70458
PH: 985.649.5832

#	DESCRIPTION	DATE
	REVISIONS	

BRIAN A. MISTICH
License No. 30187

NEW DOCK

JEFF GUNTHER

1566 MARINA DR.
SLIDELL, LA. 70458

JOB No:	2021	DATE:	11-08-2021
DRAWN BY:	CKD	CHECKED BY:	BAM

The above drawings and specifications, designs and arrangements represented thereby are and shall remain the property of Dammon Engineering, and no part thereof shall be copied, disclosed to others, or used in connection with any work or project other than the specific project for which the have been prepared and developed without written consent of Dammon Engineering. Visual contact with these drawings or specifications shall constitute conclusive evidence of acceptance of these restrictions.

SHEET TITLE:
BOAT HOUSE AND DOCK PLAN

DRAWING NUMBER:
C101

SHEET No: 1 of 1