NOTES:

OPENINGS:

1. ALL EMERGENCY ESCAPE & RESCUE OPENINGS AT GRADE FLOOR SHALL HAVE A MIN. NET CLEAR OPENING OF 5 SQ. FT. ALL OTHERS SHALL HAVE A MIN. NET CLEAR OPENING OF 5.7 SQ. FT. ALL EMERGENCY OPENINGS SHALL HAVE A MIN. NET CLEAR OPENING HEIGHT OF 24" & A MIN. WIDTH OF 20" & A MAX. SILL HEIGHT OF 44" FROM FINISHED FLOOR TO THE BOTTOM OF THE CLEAR OPENING.
2. ALL WINDOWS IN BLDG. TO BE FITTED W/ WOOD STRUCTURAL PANELS W/ A MIN. THICKNESS OF 7/16" & MAX. SPAN OF 8'. ALL PANELS TO BE PRECUT TO COVER THE OPENINGS W/ ATTACHMENT HARDWARE PROVIDED & INSTALLED IN ACCORDANCE W/ TABLE R301.2.1.2 (I.R.C.).
3. WINDOWS SHALL HAVE A MAX. SHGC OF .25 & A MAX. U-FACTOR OF .40.
4. ALL WINDOWS IN HAZARDOUS LOCATIONS MUST BE TEMPERED & COMPLY W/ SECTION R308.4 (I.R.C.)
5. ANY DOOR BETWEEN GARAGE & RESIDENCE SHALL BE A MIN. 1 3/8" THICK SOLID WOOD. 1 3/8" SOLID OR HONEYCOMB STEEL OR 20 MIN. FIRE RATED DOOR EQUIPPED WITH SELF CLOSING DEVICE. (R309.1)
6. IN DWELLING UNITS WHERE THE OPENING OF AN OPERABLE WINDOW IS LOCATED MORE THAN 72" ABOVE FINISHED GRADE OR SURFACE BELOW, THE LOWEST PART OF THE CLEAR OPENING OF THE WINDOW SHALL BE A MIN. OF 24" ABOVE FINISHED FLOOR @ LOCATION OF WINDOW. FIXED GLASS SHALL BE PERMITTED BELOW THE 24" or WINDOW GUARDS THAT COMPLY W/ ASTM F 2006 or F 2090 SHALL BE PERMITTED.

UP-LIFT CONNECTORS:

CONNECTIONS SHALL BE PROVIDED TO TRANSFER UPLIFT LOADS FROM THE ROOF ASSEMBLY TO THE FOUNDATION TO CREATE A COMPLETE LOAD PATH. ALL UPLIFT VALUES ARE BASE ON USING EITHER DOUGLAS FIR-LARCH OR SOUTHERN YELLOW PINE LUMBER. ALL CONNECTORS USED SHALL BE INSTALLED AS PER MANUFACTURERS REQUIREMENTS. WHEN CONNECTORS ARE USED IN WET SERVICE CONDITIONS, SEE MANUF. FOR WHICH PROTECTIVE COATINGS TO BE USED. IF THERE ARE ANY VARIABLES IN CONNECTION VALUES BASED ON ATTACHMENT COUNT, THE DESIGNER SHALL BE CONSULTED PRIOR TO INSTALLATION.

HIP & VALLEY RAFTERS:

HIP & VALLEY MEMBERS SHALL BE SUPPORTED AT THE RIDGE BY A BRACE TO A BEARING PARTITION OR BE DESIGNED TO CARRY AND DISTRIBUTE THE SPECIFIC LOAD AT THAT POINT AS PER R802.3. (I.R.C.)

GABLE ROOF DIAPHRAGM BRACING:

BLOCKING & CONNECTIONS SHALL BE PROVIDED AT PANEL EDGES, PERPENDICULAR TO ROOF FRAMING MEMBERS IN THE FIRST TWO BAYS OF FRAMING, & SHALL BE SPACED AT A MAX. OF 4' O.C.

FLOOR DIAPHRAGM / BRACING:

BLOCKING & CONNECTIONS SHALL BE PROVIDED PERPENDICULAR TO FLOOR FRAMING AND SHALL BE SPACED A MAX. OF 4 FT. O.C. (WHERE JOISTS ARE PARALLEL TO EXTERIOR WALLS). 2x6, 2x8 & 2x10 F.J.: MUST HAVE ADEQUATE SHEATHING or SUBFLOORING & ENDS SHALL BE HELD IN PLACE BY SOLID BLOCKING, BRIDGING, or HANGERS AT POINT OF BEARING TO HOLD IN POSITION & PREVENT ROTATION & or LATERAL DISPLACEMENT. 2x12 F.J. : SAME AS ABOVE PLUS DIAGONAL CROSS BRACING SHALL BE INSTALLED @ INTERVALS NOT EXCEEDING 8 FT.

FIRE-BLOCKING:

FIRE-BLOCKING SHALL BE REQUIRED TO CUT OFF ALL CONCEALED DRAFT OPENINGS, TO FORM AN EFFECTIVE BARRIER BETWEEN STORIES & BETWEEN A TOP STORY & A ROOF SPACE. FIRE-BLOCKING SHALL BE PROVIDED IN WOOD FRAME CONSTRUCTION AS PER R602.8 (I.R.C.)

ROOF VENTILATION:

SHALL COMPLY WITH SECT R806 OF I.R.C.

THE TOTAL NET FREE VENTILATING AREA SHALL NOT BE LESS THAN 1/150 OF THE AREA OF THE SPACE VENTILATED EXCEPT THAT REDUCTION OF THE TOTAL AREA TO 1/300 IS PERMITTED PROVIDED THAT AT LEAST 50% & NOT MORE THAN 80% OF THE REQUIRED VENTILATING AREA IS PROVIDED BY VENTILATORS AT LEAST 3 FEET ABOVE THE EAVE OR CORNICE VENTS W/ THE BALANCE OF THE REQUIRED VENTILATION PROVIDED BY EAVE OR CORNICE VENTS. WHERE EAVE OR CORNICE VENTS ARE INSTALLED, INSULATION SHALL NOT BLOCK THE FREE FLOW OF AIR. A MIN. OF 1" SPACE SHALL BE PROVIDED BTW.. THE INSULATION & THE ROOF SHEATHING & AT THE LOCATION OF THE VENT.

WHEN USING SPRAY FOAM INSULATION, AS A SEALED INSULATION SYSTEM FROM WALL TO RAFTERS, OMIT AIR VENT BAFFLES AT RAFTERS & RIDGE.

ROOF SHEATHING:

MIN. 7/16" STRUCTURAL SHEATHING INSTALLED W/ H-CLIPS & NAILED W/:
8d COMMON or 10d BOX NAILS @ 6" & 12" @ INTERIOR ZONES.
8d COMMON or 10d BOX NAILS @ 6" & 6" @ PERIMETER EDGE ZONES.
8d COMMON or 10d BOX NAILS @ 4" & 4" @ GABLE END-WALL RAKE.

EXTERIOR WALL & CEILING SHEATHING:

MIN. 7/16" STRUCTURAL SHEATHING, ALL EDGES TO BE BLOCKED & NAILED W/ 8d COMMON or 10d BOX NAILS @ 6" O.C. @ EDGES & 12" O.C. IN THE PANEL FIELD. (6" & 12")

FULL LENGTH SHEATHING (STORM BOARD):

CONNECTORS @ THE BOTTOM PLATE TO STUD & TOP PLATE TO STUD, MAY BE ELIMINATED W/ THE USE OF FULL LENGTH STORM BOARD SHEATHING FROM PLATE TO PLATE. SEE MANUFACTURER'S REQUIREMENTS FOR NAIL SPACING TO ACHIEVE PROPER UPLIFT AND SHEAR VALUES.

FLOOR SHEATHING:

EDGES OF FLOOR SHEATHING SHALL HAVE APPROVED TONGUE-&-GROOVE JOINTS or SHALL BE SUPPORTED WITH BLOCKING. SHEATHING SHALL BE ATTACHED W/ MIN. 8d COMMON NAILS MAX. SPACING OF 6" & 12".

ROOFING:

UNDERLAYMENT SHALL BE FASTENED W/ CORROSION RESISTANT FASTNERS & ARE TO BE APPLIED ALONG THE OVERLAP NOT FARTHER THAN 36" O.C. ANY PITCH BELOW 4/12. SHALL REQUIRE TWO LAYERS OF UNDERLAYMENT (R905.3.3.1).
ASPHALT SHINGLES SHALL BE CLASS "G" OR "H" AND HAVE A MIN. OF 6 FASTNERS PER SHINGLE. FASTNERS SHALL BE CORROSION RESISTANT. (R905.2.6).

ATTIC ACCESS:

WITHIN ATTICS & CRAWL SPACES WHERE ENTRY IS MADE ONLY FOR SERVICES OF UTILITIES, FOAM PLASTICS SHALL BE PROTECTED AGAINST IGNITION BY 1/2" THICK MINERAL FIBER INSULATION. 1/4" THICK WOOD STRUCTURAL PANELS, 3/8" GYP. or CORROSION RESISTANT STEEL HAVING A BASE METAL THICKNESS OF 0.016" (R314.53).

EXTERIOR FINISH:

ALL EXTERIOR SIDING AND FINISHES MUST BE APPLIED TO CONFORM TO THE WEATHER-RESISTANT BARRIER REQUIREMENTS IN SEC. R703.4 AND WITHSTAND MIN. 130 M.P.H. WINDSPEED.

FIREPLACE:

FACTORY BUILT FIREPLACES SHALL BE TESTED IN ACCORDANCE WITH UL 127. HEARTH EXTENSIONS OF APPROVED FACTORY-BUILT F.P. SHALL BE INSTALLED IN ACCORDANCE W/ THE LISTING OF THE F.P. THE HEARTH EXTENSION SHALL BE READILY DISTINGUISHABLE FROM THE SURROUNDING FLOOR AREA. (R10004)

MECHANICAL:

HEATING & COOLING EQUIPMENT SHALL BE SIZED BASED ON BUILDING LOADS CALCULATED IN ACCORDANCE WITH A.C.C.A. MANUAL "J" or OTHER APPROVED HEATING AND COOLING METHODOLOGIES.

DESIGN VALUES:

THE LUMBER DESIGN VALUES FOR SOLID SAWN LUMBER ARE BASED ON USING # 2 SOUTHERN PINE WITH AN ADJUSTMENT FACTOR FOR SHEAR STRESS OF 1.5 (TABLE 4C W.F.C.M.). THIS STATES THAT THE MAXIMUM SPLIT ON 2" NOMINAL LUMBER SHALL BE 3/4 x WIDE FACE AND THE SIZE OF SHAKE SHALL BE MAXIMUM OF 1/4 x NARROW FACE.

DOOR SCHEDULE

EXTERIOR DOORS

CODE	WIDTH	HEIGHT	THICK	DESCRIPTION	HINGE SIDE	TEMPERED GLASS	ROUGH OPENING	WALL SIZE	QUANT.
1	5'-0"	8'-0"	1 3/4"	PR. 2680 EYEBROW DBL. DOORS	LR	YES	BY MANUF.	5 1/2"	(1)
2	5'-0"	8'-0"	1 3/4"	PR. 2680 SCREEN DOORS	LR	YES	BY MANUF.	3 1/2"	(1)
3	3'-0"	9'-6"	1 3/4"	3080 1 LT. FRENCH W/ 18" TRANSOM ABOVE	L REV.	YES	BY MANUF.	5 1/2"	(1)
4	3'-0"	6'-8"	1 3/4"	1 LT. OVER 2 PANEL	L REV.	YES	BY MANUF.	5 1/2"	(1)
5	3'-0"	6'-8"	1 3/4"	20 MIN. SELF CLOSING FIRE DR.	L	NO	BY MANUF.	3 1/2"	(2)
6	3'-0"	5'-7 1/4"	1 3/4"	20 MIN. SELF CLOSING FIRE DR.	R	NO	BY MANUF.	3 1/2"	(1)
7	9'-0"	8'-0"	1 3/4"	130 MPH. O.H. GARAGE DR.	U	YES	BY MANUF.	5 1/2"	(2)

INTERIOR DOORS

CODE	WIDTH	HEIGHT	THICK	DESCRIPTION	HINGE SIDE	TEMPERED GLASS	ROUGH OPENING	WALL SIZE	QUANT.
8	3'-0"	6'-8"	1 3/8"	RAISED PANEL (MASONITE, HOLLOW)	L		BY MANUF.	3 1/2"	(1)
9	2'-8"	6'-8"	1 3/8"	RAISED PANEL (MASONITE, HOLLOW)	R		BY MANUF.	3 1/2"	(1)
10	2'-8"	6'-8"	1 3/8"	RAISED PANEL (MASONITE, SOLID)	L		BY MANUF.	3 1/2"	(3)
11	2'-6"	6'-8"	1 3/8"	RAISED PANEL (MASONITE, HOLLOW)	L		BY MANUF.	3 1/2"	(1)
12	2'-4"	6'-8"	1 3/8"	RAISED PANEL (MASONITE, HOLLOW)	L		BY MANUF.	5 1/2"	(1)
13	2'-4"	6'-8"	1 3/8"	RAISED PANEL (MASONITE, HOLLOW)	R		BY MANUF.	5 1/2"	(1)
14	2'-4"	6'-8"	1 3/8"	RAISED PANEL (MASONITE, HOLLOW)	R		BY MANUF.	3 1/2"	(1)
15	2'-0"	6'-8"	1 3/8"	RAISED PANEL (MASONITE, HOLLOW)	L		BY MANUF.	3 1/2"	(4)
16	2'-0"	6'-8"	1 3/8"	RAISED PANEL (MASONITE, HOLLOW)	R		BY MANUF.	3 1/2"	(1)
17	2'-0"	8'-0"	1 3/8"	RAISED PANEL (MASONITE, HOLLOW)	R		BY MANUF.	3 1/2"	(1)
18	1'-6"	6'-8"	1 3/8"	RAISED PANEL (MASONITE, HOLLOW)	R		BY MANUF.	3 1/2"	(1)
19	4'-0"	6'-8"	1 3/8"	PR. 2068 RAISED PANEL (MASONITE, HOLLOW)	LR		BY MANUF.	3 1/2"	(1)

(CHECK ALL OPENINGS AFTER FRAMING FOR SIZE & COUNT BEFORE ORDERING DOORS AND WINDOWS. TYPICAL.)

WINDOW SCHEDULE

CODE	WIDTH	HEIGHT	DESCRIPTION	HINGE SIDE	TEMPERED GLASS	HEADER HEIGHT	DIV. LT.	QUANT.
A	3'-0"	7'-0"	DBL. HUNG EYEBROW	N/A	YES	8'-0"	YES	(1)
B	3'-0"	6'-0"	DBL. HUNG EYEBROW	N/A	NO	8'-0"	YES	(1)
C	3'-0"	5'-0"	DOUBLE HUNG	N/A	YES	7'-0"	NO	(1)
D	3'-0"	5'-0"	DOUBLE HUNG	N/A	NO	7'-0"	NO	(1)
E	3'-0"	7'-6"	3060 DBL. HUNG WITH 3016 TRANSOM	N/A	NO	9'-6"	NO	(9)
F	3'-0"	6'-0"	DOUBLE HUNG	N/A	NO	7'-0"	NO	(3)
G	4'-0"	2'-0"	FIXED GLASS	N/A	YES	7'-10 1/2"	NO	(2)
H	3'-0"	5'-0"	DOUBLE HUNG EYEBROW	N/A	NO	SEE PLAN	NO	(1)

(CHECK ALL OPENINGS AFTER FRAMING FOR SIZE & COUNT BEFORE ORDERING DOORS AND WINDOWS. TYPICAL.)

CORNER TIE-DOWN LEGEND

LABEL	HOLD DWN.	BOLT DIAM.	MIN. CRNR.	SDS2.5 SCREWS	OPTIONAL EMBD. H.D.
1	HDU4-SDS2.5	5/8"	3"	10	STHD14
2	HDU5-SDS2.5	5/8"	3"	14	STHD14
3	HDU8-SDS2.5	7/8"	4 1/2"	20	N/A
4	HDU11-SDS2.5	1"	7 1/2"	30	N/A

HDU SERIES HOLD DOWNS: CAN BE INSTALLED W/ EMBEDDED ANCHOR BOLT or RETRO FIT BY DRILLING HOLE 1/8" LARGER THAN ANCHOR, CLEAN OUT DUST, FILL HOLE 1/2 WAY W/ SET-XP EPOXY, INSERT ANCHOR, ALLOW TO SET & CURE AS PER MANUF. REQUIREMENTS.

STHD SERIES HOLD DOWNS: MUST BE EMBEDDED, HELD 1 1/2" OUT OF CORNER (TO ALLOW FOR SHEATHING ATTACHMENT) & HAVE A MIN. 5.5" CONC. STEM WALL.

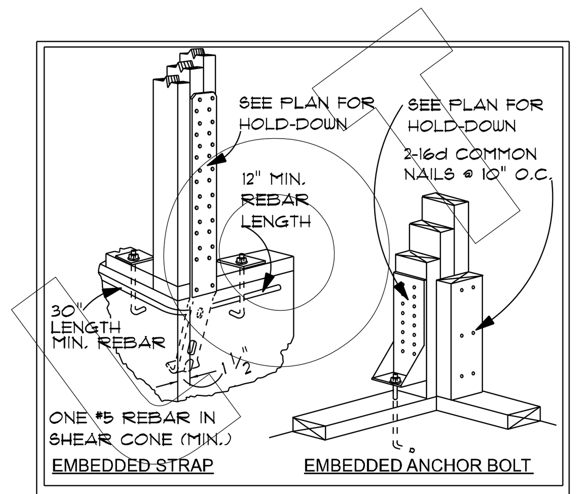

TYPICAL CORNER TIE-DOWN

FLOOR PLAN

SCALE = 1/4"=1'-0"

LIVING AREA	=	2056
FRONT PORCH	=	43
REAR PORCH	=	294
GARAGE	=	640
TOTAL AREA U.B.	=	3033
BONUS ROOM	=	394

© LOT 364 MOONRAKER ISLAND

NOTE:
ALTHOUGH EVERY EFFORT HAS BEEN MADE IN PREPARING THESE DRAWINGS, THE CONTRACTOR IS ULTIMATELY RESPONSIBLE FOR CHECKING THE PLANS FOR ACCURACY AND OR ERRORS BEFORE CONSTRUCTION BEGINS.

NOTE:
THIS DRAWING CONTAINS VALUABLE, CONFIDENTIAL, PROPRIETARY, TRADE SECRET INFORMATION OF CLARKE'S DESIGN SERVICE, LLC. NO REPRODUCTION OR OTHER USE OF THE DRAWING OR ANY OF ITS CONTENTS IS PERMITTED WITHOUT THE WRITTEN CONSENT OF CLARKE'S DESIGN SERVICE, (C) COPYRIGHT, 2011, AN UNPUBLISHED WORK BY CLARKE'S DESIGN SERVICE, LLC. ALL RIGHTS RESERVED.

CLARKE'S DESIGN SERVICE, LLC.
(985) 641-0531 WWW.CLARKESDESIGN.COM (800) 843-5247

JOELLE & DALE DEBAUTTE
LOT 364, MOONRAKER ISLAND, PH. 3A
ST. TAMMANY PARISH, LA.

DATE	CODE	LIV AREA	AREA U.B.	INDEX
12-08-21	A4	2056	3033	6894

SHEET DESCRIPTION:
FLOOR PLAN