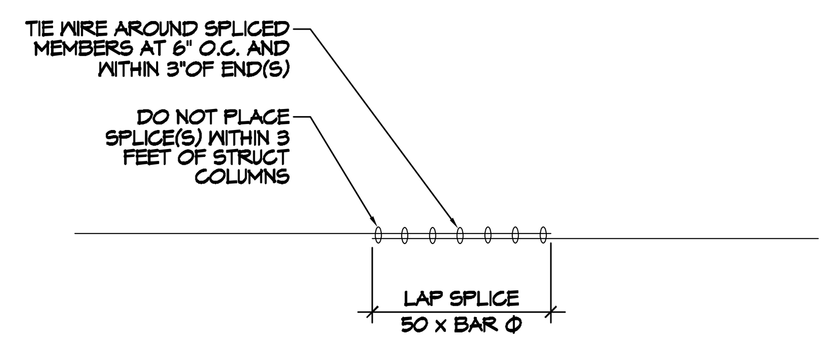

REBAR SPLICE
SCALE: 1/2" = 1' - 0"

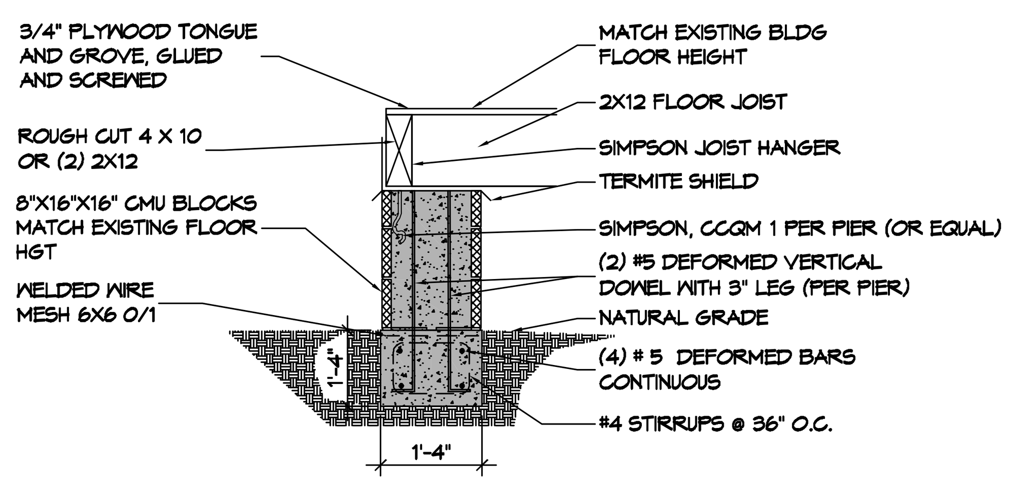

FOUNDATION SECTION
SCALE: 1/2" = 1' - 0"

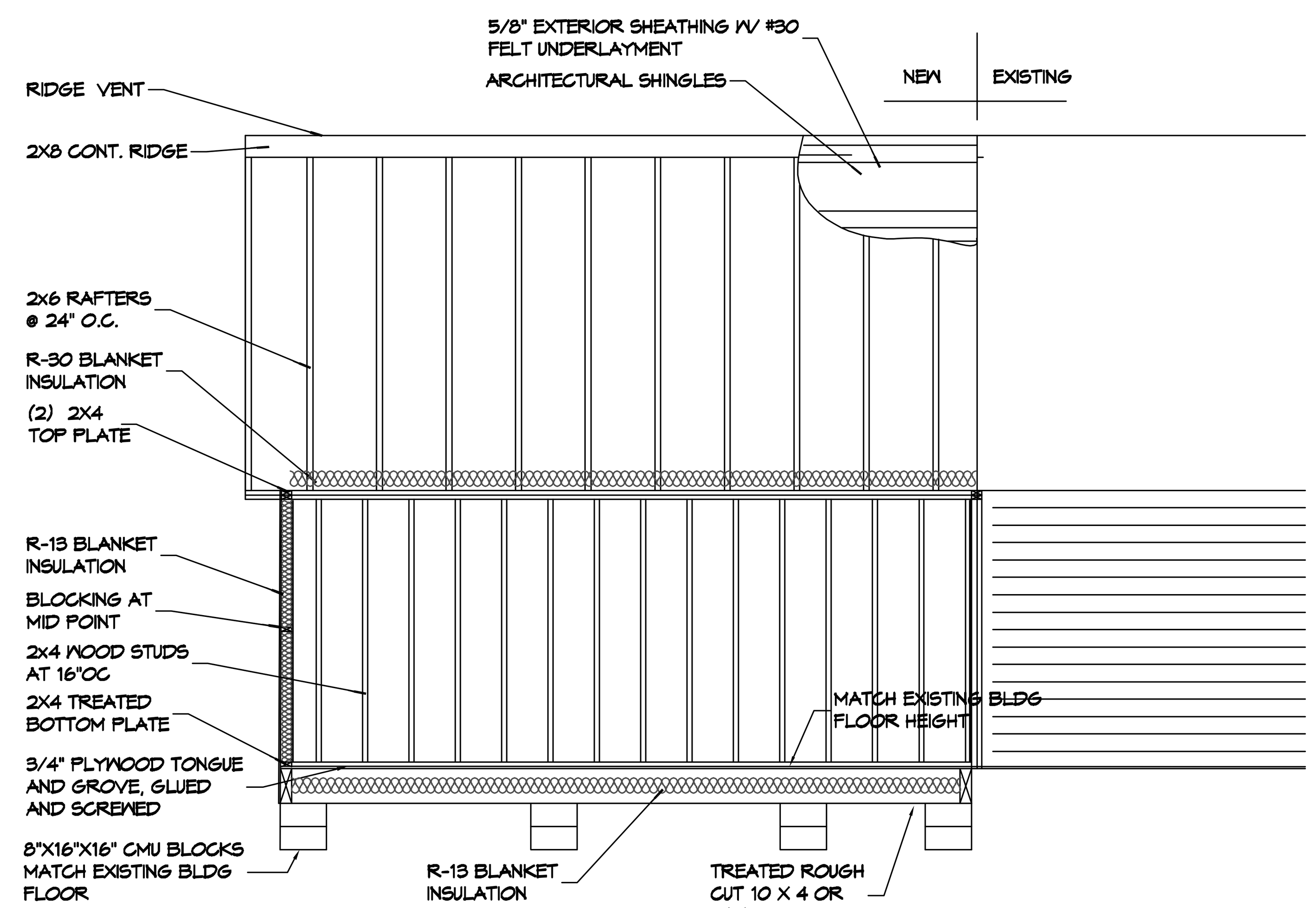

3 TYPICAL SECTION
SCALE: 1/4" = 1'-0"

GENERAL FOUNDATION NOTES

1. ALL DIMENSIONS ARE EDGE OF CONCRETE (EOC) TO EDGE OF CONCRETE (EOC) UNLESS NOTED OTHERWISE.
2. VERIFY ALL PLUMBING ROUGH-IN LOCATIONS AND DOUBLE UP ON FLOOR JOIST IN THOSE AREAS.
3. CONCRETE MIX SHALL HAVE A MINIMUM COMPRESSIVE STRENGTH OF 4000 PSI AT 28 DAYS. CONCRETE MIX SHALL BE IN ACCORDANCE WITH ACI-318.
4. ALL CONVENTIONAL REINFORCING STEEL SHALL MEET ASTM-A615 (GRADE 60).
5. ONE LAYER OF POLYETHYLENE VAPOR BARRIER SHALL BE PLACED UNDER ALL CONCRETE. VAPOR RETARDER TO BE MINIMUM 10 MIL, THICKNESS; ASTM E 1745 CLASS A, PERMEANCE LESS THAN 0.01 PERMS, EQUAL TO STEGO INDUSTRIES STEGO WRAP, ECOSHIELD-E 15 MIL BY EPRO, OR IRONBAR 15 BY FLATIRON FILMS. PROVIDE APPROPRIATE ACCESSORIES FOR A COMPLETE SYSTEM.
6. ALL REINFORCING STEEL AND MESH SHALL BE SECURELY SUPPORTED TO PREVENT BOTH VERTICAL AND HORIZONTAL MOVEMENT DURING CONCRETE PLACEMENT.
7. THE CONTRACTOR SHALL VERIFY ALL DROPS, OFFSETS, BRICK LEDGES, DIMENSIONS AND CONFIGURATIONS.
8. GRADE BEAM DIMENSIONS MAY VARY BY -5%, +20%.
8. FILL, AS A MINIMUM QUALITY, SHALL BE 40% CLAY AND 60% SANDY MIXTURE, PLACED IN 6" LIFTS AND COMPACTED TO A MINIMUM OF 95% STANDARD PROCTOR. FOOTINGS ARE DESIGNED TO USE SOIL WITH A BEARING PRESSURE OF 2000 LBS. PER SQUARE FOOT OR MORE. IT IS RECOMMENDED THAT THE OWNER VERIFY ALLOWABLE SOIL BEARING PRESSURE CAPACITY BY CONTRACTING THE SERVICES OF A SOILS ENGINEERING COMPANY.
9. ALL SOIL BELOW SLAB SHALL RECEIVE TERMITE TREATMENT.

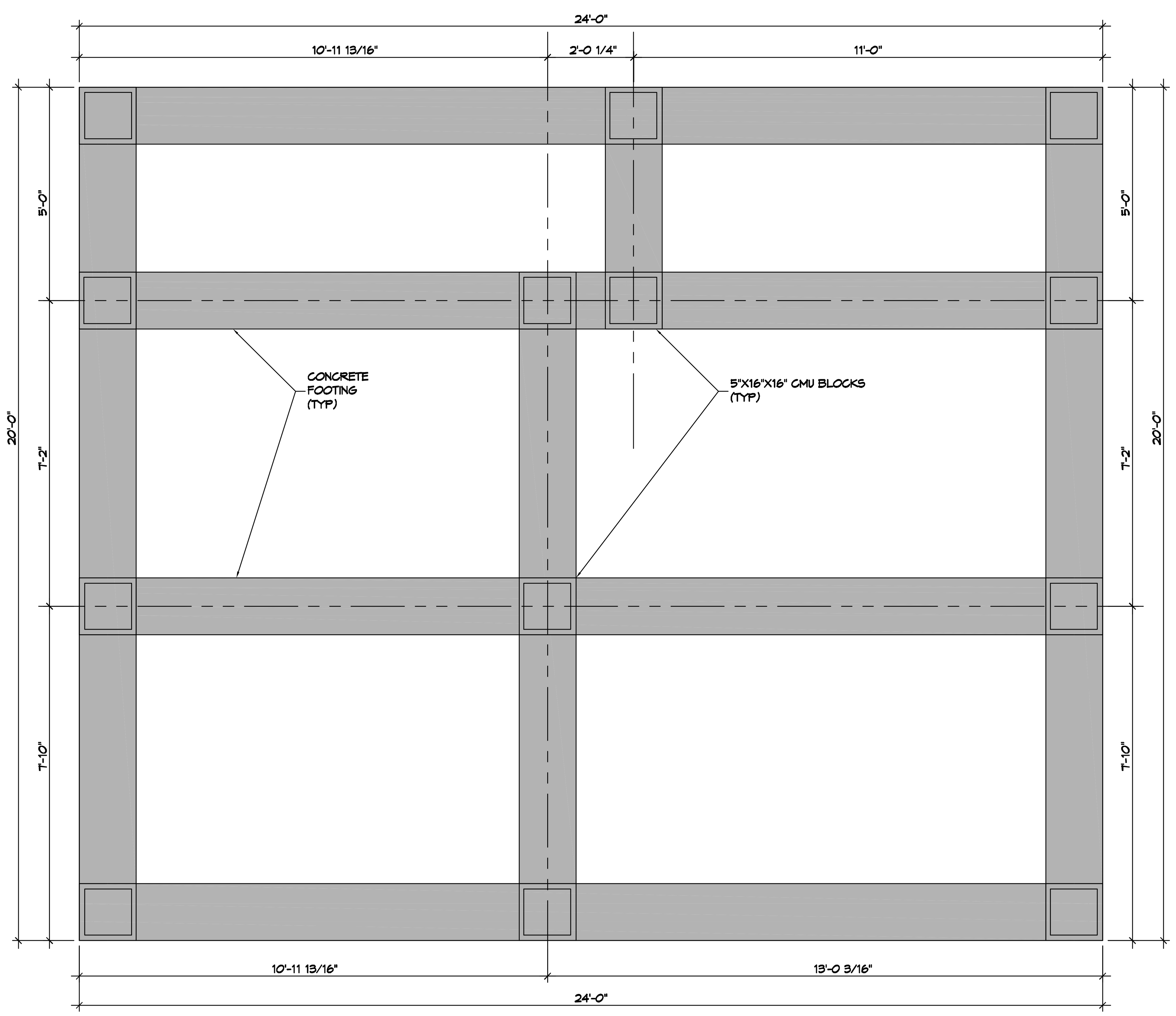

1 FOUNDATION PLAN
SCALE: 1/2" = 1'-0"

FOUNDATION PLAN

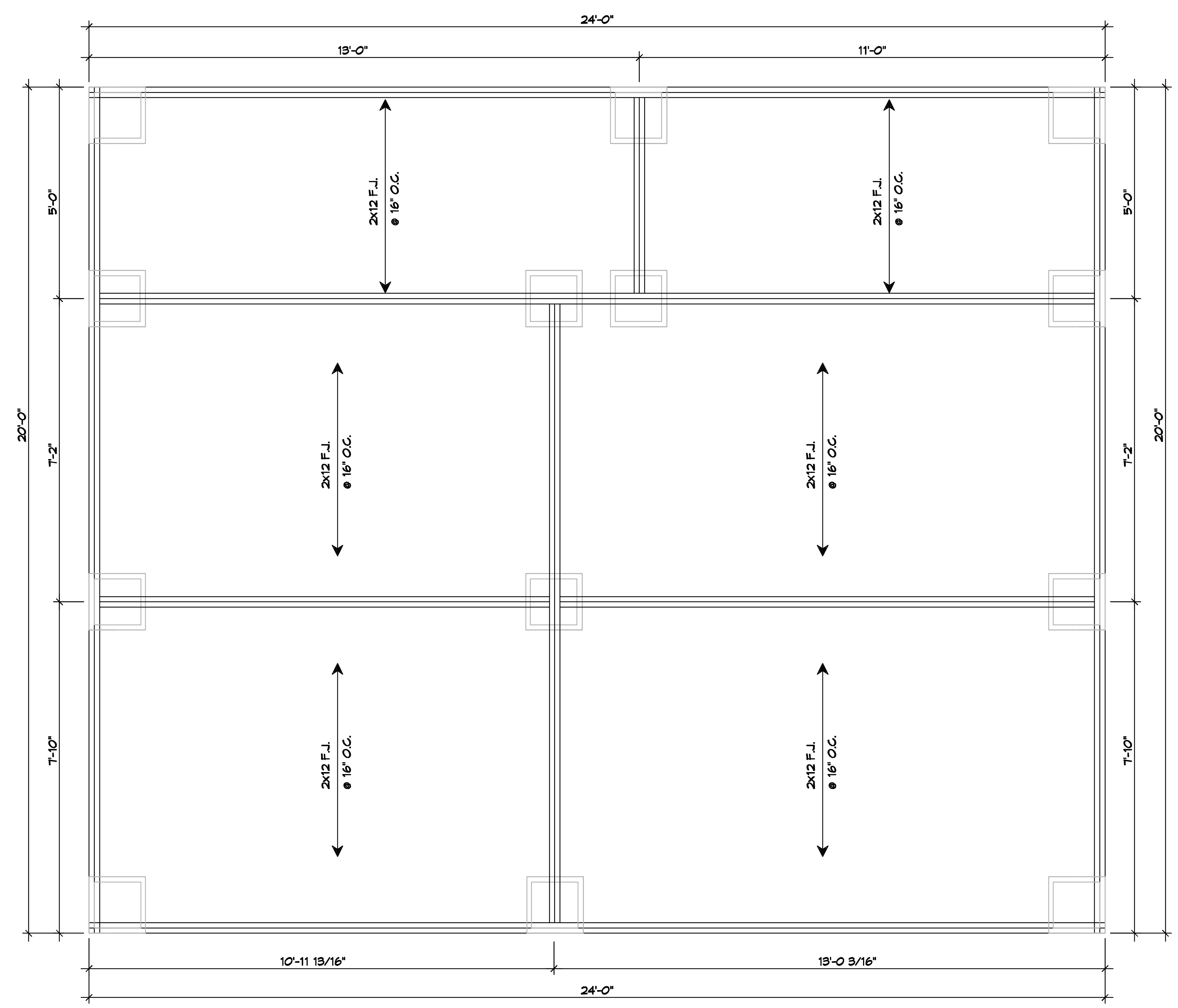

2 FLOOR FRAMING PLAN
SCALE: 1/2" = 1'-0"

FRAMING PLAN

DAMMON ENGINEERING, INC.
LOUISIANA & MISSISSIPPI
Chief Engineer: Brian Mistich, PE
554 Old Spanish Trail
Slidell, LA 70458
www.dammonengineering.com
info@dammonengineering.com
PH: 985.649.5832

#	DESCRIPTION	REVISIONS	DATE

SEAL:

CHASE JACOBS

643 CITRUS STREET
SLIDELL, LA. 70460

JOB No:	DATE: 03-02-22
DRAWN BY: CKD	CHECKED BY: BAM

The above drawings and specifications, designs and arrangements represented thereby are and shall remain the property of Dammon Engineering, and no part thereof shall be copied, disclosed to others, or used in connection with any work or project other than the specific project for which the have been prepared and developed without written consent of Dammon Engineering. Visual contact with these drawings or specifications shall constitute conclusive evidence of acceptance of these restrictions.

SHEET TITLE:
FOUNDATION PLAN

DRAWING NUMBER:
S100

DOOR SCHEDULE

MK	WIDTH	HEIGHT	THK	DOOR MAT	FRAME MAT	NOTES
D01	3'-0"	6'-8"	1-3/4"	WOOD	WOOD	EXISTING DOOR
D02	3'-0"	6'-8"	1-3/4"	WOOD	WOOD	NEW DOOR
D03	(2)2'-0"	6'-8"	1-3/4"	WOOD	WOOD	NEW DOOR
D04	2'-6"	6'-8"	1-3/4"	WOOD	WOOD	NEW DOOR
D05	2'-0"	6'-8"	1-3/4"	WOOD	WOOD	NEW DOOR

WINDOW SCHEDULE

MK	WIDTH	HEIGHT	FRAME MAT	NOTES
W01	3'-0"	5'-0"	ALUM	NEW WINDOW INSULATED
W02	(2)3'-0"	5'-0"	ALUM	NEW WINDOW INSULATED
W03	3'-0"	4'-0"	ALUM	NEW WINDOW INSULATED FROSTED
W04	4'-0"	2'-0"	ALUM	NEW WINDOW INSULATED FROSTED

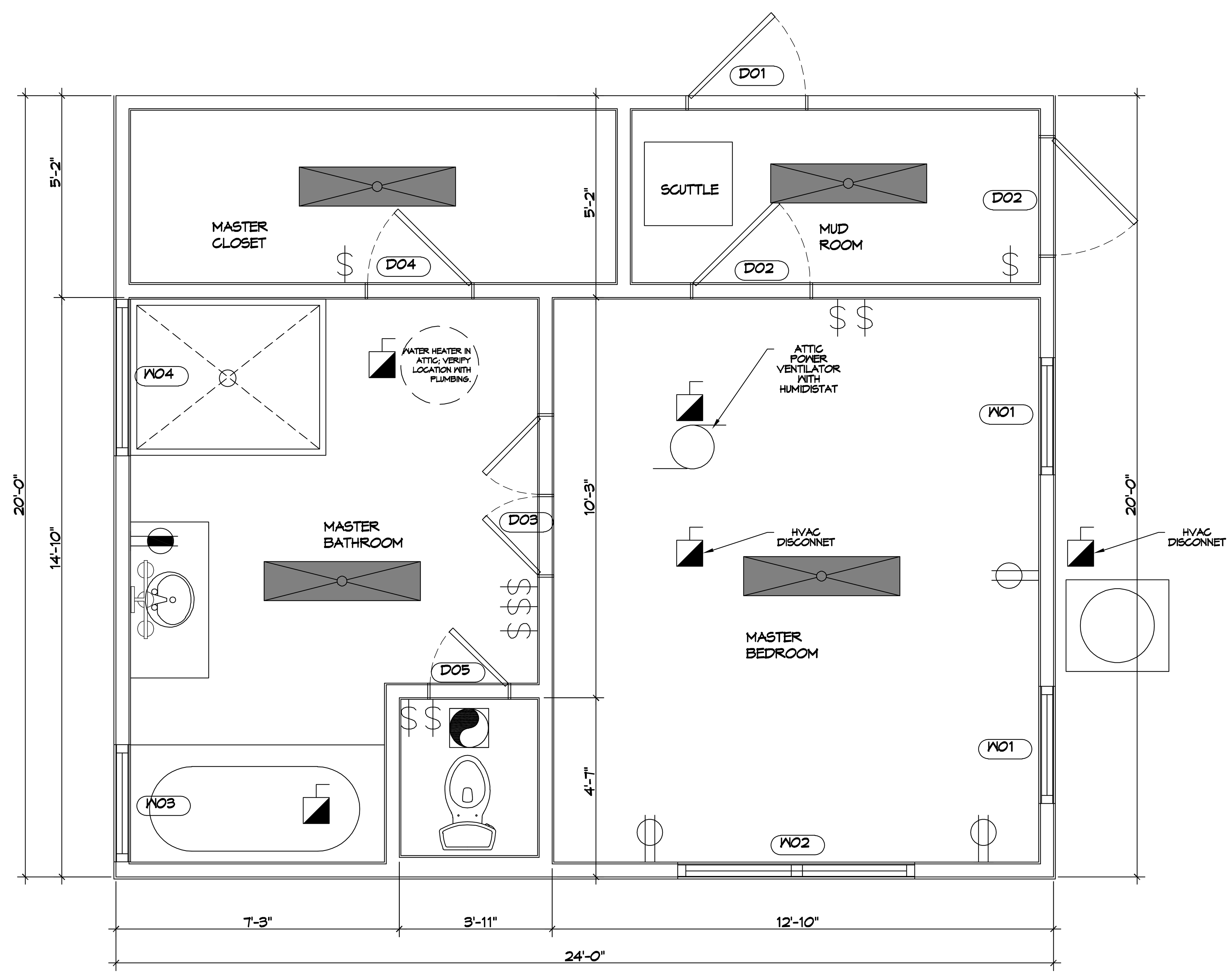

4 FLOOR PLAN

SCALE: 1/2"= 1'-0"

DAMMON ENGINEERING, INC.
LOUISIANA & MISSISSIPPI
Chief Engineer: Brian Mistich, PE
554 Old Spanish Trail
Slidell, LA 70458
www.dammonengineering.com
info@dammonengineering.com
PH: 985.649.5832

#	DESCRIPTION	REVISIONS	DATE

SEAL:

CHASE JACOBS

643 CITRUS STREET
SLIDELL, LA. 70460

JOB No:	DATE: 03-02-22
DRAWN BY: CKD	CHECKED BY: JMS

The above drawings and specifications, designs and arrangements represented thereby are and shall remain the property of Dammon Engineering, and no part thereof shall be copied, disclosed to others, or used in connection with any work or project other than the specific project for which the have been prepared and developed without written consent of Dammon Engineering. Visual contact with these drawings or specifications shall constitute conclusive evidence of acceptance of these restrictions.

SHEET TITLE:
FLOOR PLAN

DRAWING NUMBER:

A101

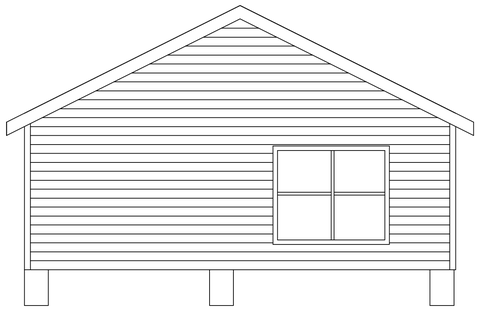

5 REAR VIEW
SCALE: 1/4" = 1'-0"

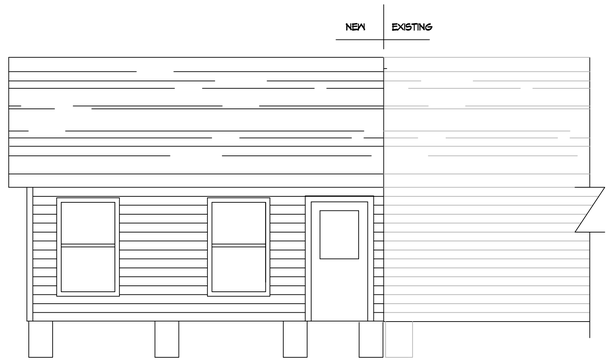

6 SIDE VIEW
SCALE: 1/4" = 1'-0"

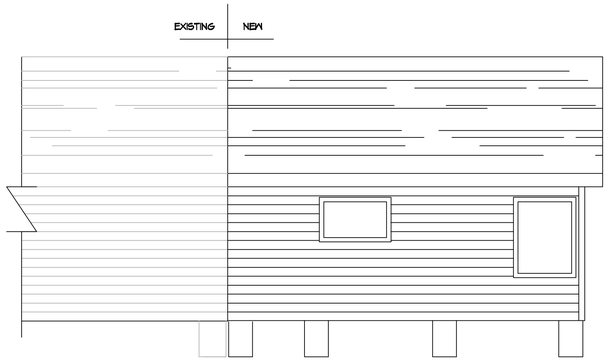

7 SIDE VIEW
SCALE: 1/4" = 1'-0"

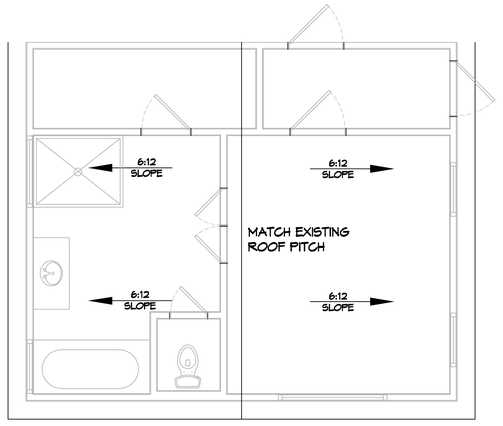

8 ROOF PLAN
SCALE: 1/4" = 1'-0"

DAMMON
ENGINEERING, INC.
LOUISIANA & MISSISSIPPI
www.dammonengineering.com
info@dammonengineering.com
PH: 985.649.5832
Chief Engineer: Brian Mstich, PE
554 Old Spanish Trail
Slidell, LA 70458

REVISIONS

#	DESCRIPTION	DATE

SEAL:

CHASE JACOBS
643 CITRUS STREET
SLIDELL, LA. 70460

JOB No:
DATE: 03-02-22
DRAWN BY: CKD
CHECKED BY: BAM

SHEET TITLE:
BLDG
ELEVATIONS

DRAWING NUMBER:
A102

SHEET No: 3 of 4

FILE NAME: J:\- Foundations or Structural Only\643 Citrus St Slidell Chase Jacobs\Current Drawings\A103 -Typical Connection Details-Schedules & Notes.dwg PLOT DATE & TIME: Wednesday, March 2, 2022 7:37:55 AM

TABLE S102.7 - HEADER SPANS FOR INTERIOR LOAD-BEARING WALLS

		DROPPED HEADER			RAISED HEADER		
		BUILDING WIDTH (ft)			BUILDING WIDTH (ft)		
		12	24	36	12	24	36
HEADERS SUPPORTING	SIZE	MAXIMUM HEADER SPAN			MAXIMUM HEADER SPAN		
ONE FLOOR ONLY (SINGLE CENTER BEARING WALL)	(2) 2x4	4'-0"	2'-10"	2'-4"	4'-1"	2'-10"	2'-4"
	(2) 2x6	5'-11"	4'-3"	3'-5"	6'-1"	4'-4"	3'-6"
	(2) 2x8	7'-1"	5'-2"	4'-4"	7'-9"	5'-5"	4'-5"
	(2) 2x10	7'-11"	6'-0"	5'-0"	9'-2"	6'-6"	5'-3"
	(2) 2x12	8'-6"	6'-7"	5'-7"	10'-9"	7'-7"	6'-3"
	(3) 2x8	8'-5"	6'-4"	5'-3"	9'-8"	6'-10"	5'-7"
	(3) 2x10	9'-3"	7'-1"9'-10"	6'-0"	11'-5"	8'-1"	6'-7"
	(3) 2x12	9'-11"	7'-8"	6'-7"	13'-6"	9'-6"	7'-9"
	(4) 2x8	9'-5"	7'-2"	6'-0"	11'-2"	7'-11"	6'-5"
	(4) 2x10	10'-3"	7'-11"	6'-9"	13'-3"	9'-4"	7'-8"
	(4) 2x12	11'-0"	8'-7"	7'-4"	15'-7"	11'-0"	9'-0"

TABLE S102.8 - HEADER SPANS FOR EXTERIOR LOAD-BEARING WALLS RESISTING WIND LOADS EXP "C"

SIZE	120 MPH	130 MPH	140 MPH	150 MPH	160 MPH	170 MPH	180 MPH	195 MPH
(2) 2x4	5'-1"	4'-8"	4'-4"	4'-1"	3'-10"	3'-7"	3'-5"	3'-2"
(2) 2x6	6'-3"	5'-9"	5'-4"	5'-0"	4'-8"	4'-5"	4'-2"	3'-10"
(2) 2x8	6'-10"	6'-4"	5'-11"	5'-6"	5'-2"	4'-10"	4'-7"	4'-3"
(2) 2x10	7'-4"	6'-10"	6'-4"	5'-11"	5'-6"	5'-2"	4'-11"	4'-6"
(2) 2x12	7'-10"	7'-3"	6'-9"	6'-3"	5'-11"	5'-7"	5'-3"	4'-10"
(3) 2x8	8'-5"	7'-9"	7'-2"	6'-9"	6'-4"	5'-11"	5'-7"	5'-2"
(3) 2x10	9'-0"	8'-4"	7'-9"	7'-3"	6'-9"	6'-4"	6'-0"	5'-7"
(3) 2x12	9'-7"	8'-11"	8'-3"	7'-8"	7'-3"	6'-10"	6'-5"	5'-11"
(4) 2x8	9'-8"	9'-0"	8'-4"	7'-9"	7'-3"	6'-10"	6'-6"	6'-0"
(4) 2x10	10'-5"	9'-7"	8'-11"	8'-4"	7'-10"	7'-4"	6'-11"	6'-5"
(4) 2x12	11'-7"	11'-1"	10'-3"	9'-6"	8'-11"	8'-4"	7'-10"	6'-10"

TABLE S102.9 - SILL OR BOTTOM PLATE TO FOUNDATION CONNECTIONS RESISTING UPLIFT LOADS - 130 MPH WIND EXP "C"

BOTTOM PLATE TO FOUNDATION ANCHOR BOLT CONNECTION RESISTING	FOUNDATION SUPPORTING	MAXIMUM ANCHOR BOLT SPACING (INCHES)	
		8' END ZONES	INTERIOR ZONES
UPLIFT LOADS	1 - 3 STORIES	50 INCHES ON CENTER	58 INCHES ON CENTER
NOTE: A MINIMUM OF ONE ANCHOR BOLT SHALL BE PROVIDED WITHIN 6 TO 12 INCHES OF EACH END OF EACH PLATE			

TABLE S102.10 - BOTTOM PLATE TO FOUNDATION CONNECTIONS (ANCHOR BOLTS) RESISTING LATERAL & SHEAR LOADS - EXP "C"

BOTTOM PLATE TO FOUNDATION ANCHOR BOLT CONNECTION RESISTING	FOUNDATION SUPPORTING	MAXIMUM ANCHOR BOLT SPACING (INCHES)	
		1/2" Φ ANCHOR BOLTS	5/8" Φ ANCHOR BOLTS
UPLIFT LOADS	1 STORY	31 INCHES ON CENTER	48 INCHES ON CENTER

TABLE S102.11 - FULL HEIGHT STUD REQUIREMENT FOR HEADERS OR WINDOW SILL PLATES IN EXTERIOR WALLS EXP "C"

	WALL STUD SPACING (INCHES)		
	12" O.C.	16" O.C.	24" O.C.
HEADER SPAN (FEET)	NUMBER OF FULL HEIGHT STUD REQUIRED AT EACH END OF THE HEADER		
2	1	1	1
4	2	2	1
6	3	3	2
8	4	3	2
10	5	4	3
12	6	5	3
14	7	6	4
16	8	6	4

TABLE S102.5 - JACK STUD REQ - INT LOADBEARING WALLS

HEADER SUPPORTING	HEADER SPAN (FT)	ROOF SPAN (FEET)											
		12 FEET				24 FEET				36 FEET			
		HEADER WIDTH											
		3"	4.5"	5"	6"	3"	4.5"	5"	6"	3"	4.5"	5"	6"
		NUMBER OF JACK STUDS REQUIRED AT EACH END OF THE HEADER											
ONE FLOOR ONLY (CENTER BEARING)	2	1	1	1	1	1	1	1	1	1	1	1	1
	4	1	1	1	1	1	1	1	1	1	1	1	1
	6	1	1	1	1	1	1	1	1	2	1	1	1
	8	1	1	1	1	2	1	1	1	2	2	2	1
	10	1	1	1	1	2	2	1	1	3	2	2	2
	12	1	1	1	1	2	2	2	1	3	2	2	2
	14	2	1	1	1	3	2	2	2	4	3	3	2
	16	2	1	1	1	3	2	2	2	4	3	3	2
TWO FLOORS (CENTER BEARING)	2	1	1	1	1	1	1	1	1	2	1	1	1
	4	1	1	1	1	2	1	1	1	3	2	2	2
	6	2	1	1	1	3	2	2	2	4	3	2	2
	8	2	2	1	1	3	2	2	2	5	3	3	3
	10	2	2	2	1	4	3	3	2	6	4	4	3
	12	3	2	2	2	5	3	3	3	7	5	4	4
	14	3	2	2	2	6	4	4	3	8	5	5	4
	16	4	3	2	2	6	4	4	3	9	6	6	5

HEADER WIDTH - 3" (2-2x), 4.5" (3-2x), 5", 6.5" (4-2x) EACH W/ 1/2" PLYWOOD SPACER BETWEEN

TABLE S102.6 - JACK STUD REQ - EXTERIOR LOADBEARING WALLS

HEADER SUPPORTING	HEADER SPAN (FT)	ROOF LIVE LOAD 20 PSF				GROUND SNOW LOAD 30 PSF			
		3"	4.5"	5"	6"	3"	4.5"	5"	6"
		NUMBER OF JACK STUDS REQUIRED							
ROOF AND CEILING	2	1	1	1	1	1	1	1	1
	4	1	1	1	1	1	1	1	1
	6	2	1	1	1	2	1	1	1
	8	2	2	2	1	2	2	2	1
	10	3	2	2	2	3	2	2	2
	12	3	2	2	2	3	2	2	2
	14	4	3	2	2	4	3	2	2
	16	4	3	3	2	4	3	3	2
ROOF, CEILING, AND ONE CENTER BEARING FLOOR	2	1	1	1	1	1	1	1	1
	4	2	1	1	1	2	1	1	1
	6	2	2	2	1	3	2	2	2
	8	3	2	2	2	3	2	2	2
	10	4	3	2	2	4	3	3	2
	12	4	3	3	2	5	3	3	3
	14	5	4	3	3	5	4	3	3
	16	6	4	4	3	6	4	4	3

HEADER WIDTH - 3" (2-2x), 4.5" (3-2x), 5", 6" (4-2x) EACH W/ 1/2" PLYWOOD SPACER BETWEEN

TABLE S102.3 -NAILING SCHEDULE

DESCRIPTION	NUMBER OF COMMON NAILS	NUMBER OF BOX NAILS	SPACING
WALL FRAMING			
TOP PLATE TO TOP PLATE (FACE NAILED)	2-16d	2-16d	PER FOOT
TOP PLATE AT INTERSECTION (FACE)	4-16d	5-16d	JOINTS - EACH SIDE
STUD TO STUD (FACE-NAILED)	2-16d	2-16d	24" o.c.
HEADER TO HEADER (FACE NAILED)	16d	16d	16" o.c. EDGES
TOP OR BOTTOM PLATE TO STUD (END)	SEE TABLE	SEE TABLE	PER STUD
BOTTOM PLATE TO FLOOR JOIST, BANDJOIST, END JOIST OR BLOCKING	2-16d	2-16d	PER FOOT
ROOF SHEATHING			
WOOD STRUCTURAL PANELS	8d	10d	SEE TABLE S102.1
DIAGONAL BOARD SHEATHING			
1"x6" OR 1"x8"	2-8d	2-10d	PER SUPPORT
1"x10" OR WIDER	3-8d	3-10d	PER SUPPORT

TABLE S102.4 - BUILDING ENVELOPE REQUIREMENTS

OPAQUE ELEMENTS		ASSEMBLY MAXIMUM	INSULATION MIN. R-VALUE
ROOFS	INSULATION ENTIRELY ABOVE DECK	U-0.048	R-20.0 c.i.
	METAL BUILDING	U-0.065	R-19
	ATTIC AND OTHER	U-0.027	R-38
WALLS, ABOVE GRADE	MASS	U-0.151 @	R-5.7 c.i. @
	METAL BUILDING	U-0.113	R-13.0
	STEEL-FRAMED	U-0.124	R-13.0
	WOOD-FRAMED AND OTHER	U-0.089	R-13.0
FLOORS	MASS	U-0.107	R6-3 c.i.
	STEEL JOIST	U-0.052	R-19.0
	WOOD FRAMED AND OTHER	U-0.051	R-19.0
SLAB-ON-GRADE	UN-HEATED	F-0.730	NR
OPAQUE DOORS	SWINGING	U-0.700	NR
	NON-SWINGING	U-1.450	NR

c.i. = CONTINUOUS INSULATION; NR = NO INSULATION REQUIREMENT
@ = EXCEPTION APPLIES

ROOF UNDERLAYMENT NOTES

1. FOR ROOF SLOPES FROM TWO UNITS VERTICAL IN 12 UNITS HORIZONTAL (17-PERCENT SLOPE), UP TO FOUR UNITS VERTICAL IN 12 UNITS HORIZONTAL (33-PERCENT SLOPE), UNDERLAYMENT SHALL BE TWO LAYERS APPLIED IN THE FOLLOWING MANNER:
   a. APPLY A 19 INCH STRIP OF UNDERLAYMENT FELT PARALLEL WITH AND STARTING AT THE EAVES, FASTENED SUFFICIENTLY TO HOLD IN PLACE. STARTING AT THE EAVE, APPLY 36 INCH WIDE SHEETS OF UNDERLAYMENT, OVERLAPPING SUCCESSIVE SHEETS 19 INCHES, AND FASTENED SUFFICIENTLY TO HOLD IN PLACE.
2. FOR ROOF SLOPES OF FOUR UNITS VERTICAL IN 12 UNITS HORIZONTAL (33-PERCENT SLOPE) OR GREATER, UNDERLAYMENT SHALL BE ONE LAYER APPLIED IN THE FOLLOWING MANNER:
   a. UNDERLAYMENT SHALL BE APPLIED SHINGLE FASHION, PARALLEL TO AND STARTING FROM THE EAVE AND LAPPED 2 INCHES, FASTENED SUFFICIENTLY TO HOLD IN PLACE. END LAPS SHALL BE OFFSET BY 6 FEET.

SHINGLE APPLICATION & FASTENING NOTES

1. ASPHALT STRIP SHINGLES SHALL HAVE A MINIMUM OF SIX FASTENERS PER SHINGLE WHERE THE ROOF IS IN ONE OF THE FOLLOWING CATEGORIES:
   a. THE BASIC WIND SPEED IS 110 MPH OR GREATER AND THE EAVE IS 20 FEET OR HIGHER ABOVE GRADE.
   b. THE BASIC WIND SPEED IS 120 MPH OR GREATER.
   c. SPECIAL WIND ZONES.

GENERAL UPLIFT CONNECTION NOTES

ROOF ASSEMBLY TO WALL ASSEMBLY:
UPLIFT CONNECTIONS SHALL BE FROM RAFTER OR TRUSS TO WALL STUD. WHEN RAFTERS OR TRUSSES ARE NOT LOCATED DIRECTLY ABOVE STUDS, RAFTERS SHALL BE ATTACHED TO THE WALL PLATE AND THE WALL TOP PLATE SHALL BE ATTACHED TO THE WALL STUD WITH UPLIFT CONNECTIONS. UPLIFT CONNECTIONS SHALL BE IN ACCORDANCE WITH TABLE S102.10.

WALL ASSEMBLY TO WALL ASSEMBLY:
STORY TO STORY UPLIFT CONNECTIONS FROM UPPER STORY WALL STUD TO LOWER STORY WALL STUD. WHEN UPPER STORY WALL STUDS ARE NOT LOCATED DIRECTLY ABOVE LOWER WALL STUDS, THE STUDS SHALL BE ATTACHED TO A COMMON MEMBER IN THE FLOOR ASSEMBLY BY UPLIFT CONNECTIONS. UPLIFT CONNECTIONS SHALL BE IN ACCORDANCE WITH TABLE S102.11.

WALL ASSEMBLY TO FOUNDATION:
FIRST FLOOR WALL STUDS SHALL BE CONNECTED TO THE FOUNDATION, SILL, PLATE, OR BOTTOM PLATE. A MINIMUM OF A 1-1/4" x 20 GA. ASTM A653 GRADE 33 STEEL STRAP SHALL BE NAILED TO THE WALL STUDS AND HAVE A MINIMUM EMBEDMENT OF 7 INCHES IN CONCRETE FOUNDATIONS AND SLABS-ON-GRADE, 15 INCHES IN MASONRY BLOCK FOUNDATIONS, OR BE LAPPED UNDER THE BOTTOM PLATE, 3 INCH SQUARE WASHERS SHALL BE USED ON THE ANCHOR BOLTS AND ANCHOR BOLT SPACINGS SHALL NOT EXCEED THE REQUIREMENTS. STEEL STRAPS EMBEDDED IN OR IN CONTACT WITH SLAB-ON-GRADE OR MASONRY BLOCK FOUNDATIONS SHALL BE HOT-DIPPED GALV. AFTER FABRICATION, OR MANUF. FROM G185 OR Z450 GALV. STL. CONNECTIONS SHALL BE IN ACCORDANCE WITH TABLE S102.12.

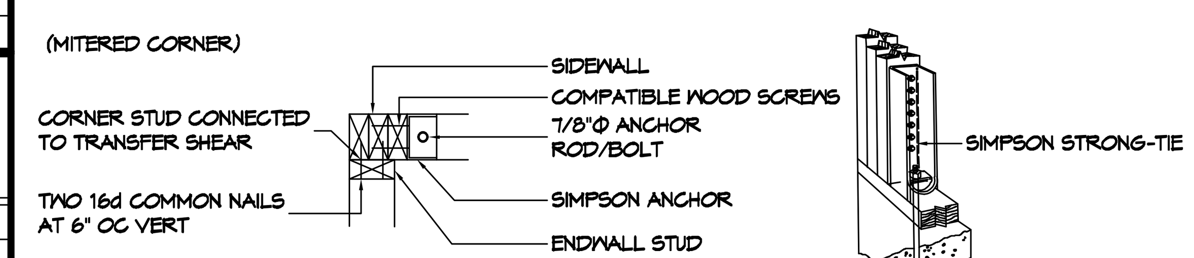

NOTE: HOLDDOWNS ARE REQUIRED AT THE END OF EACH SEGMENTED SHEARWALL SEGMENT OR AT THE EACH END OF A PERFORATED SHEARWALL. WHEN FULL HEIGHT SHEARWALL SEGMENTS MEET AT A CORNER, A SINGLE HOLDDOWN SHALL BE PERMITTED TO BE USED TO RESIST THE OVERTURNING FORCES IN BOTH DIRECTIONS WHEN THE CORNER FRAMING IN THE ADJOINING WALLS IS FASTENED TOGETHER TO TRANSFER THE UPLIFT LOAD.

(F) CORNER HOLDDOWN

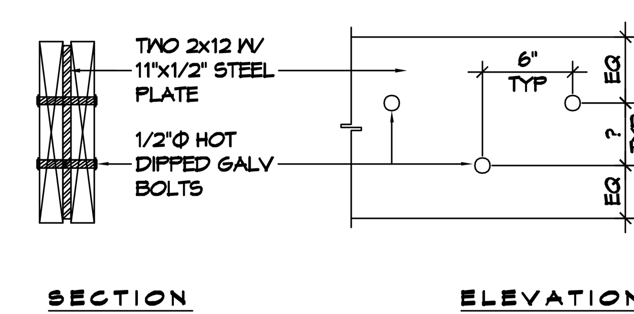

(N) FLITCH BEAM

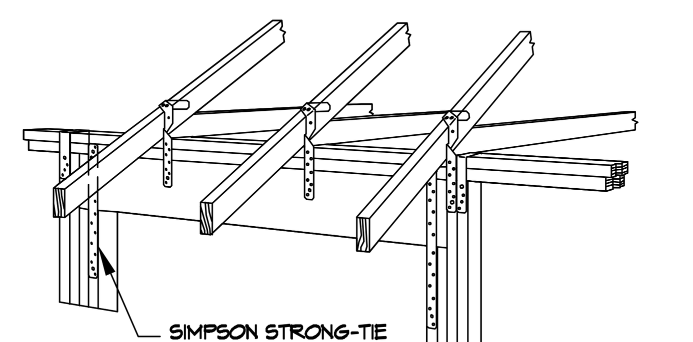

(M) RAFTER, TOP PLATE & OPENING CONNECTIONS

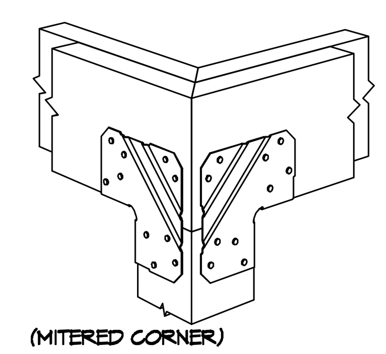

(L) POST TO BEAM

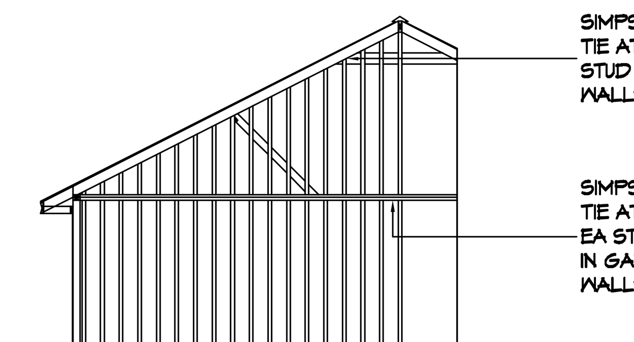

(K) END WALL CONNECTIONS

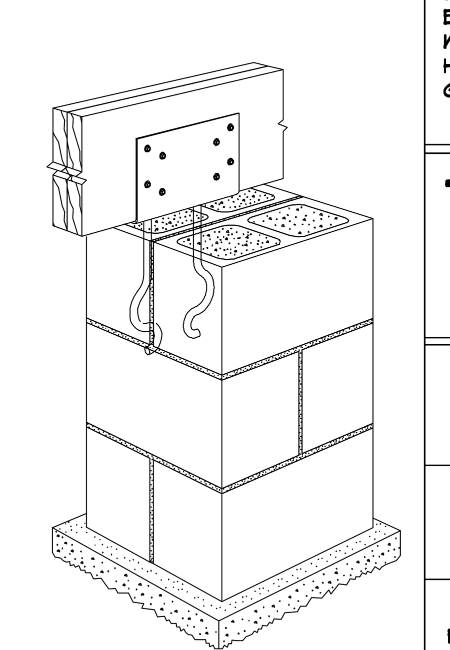

SIMPSON STRONG-TIE
TYPICAL CCQM INSTALLATION

(J) SIMPSON CCQM

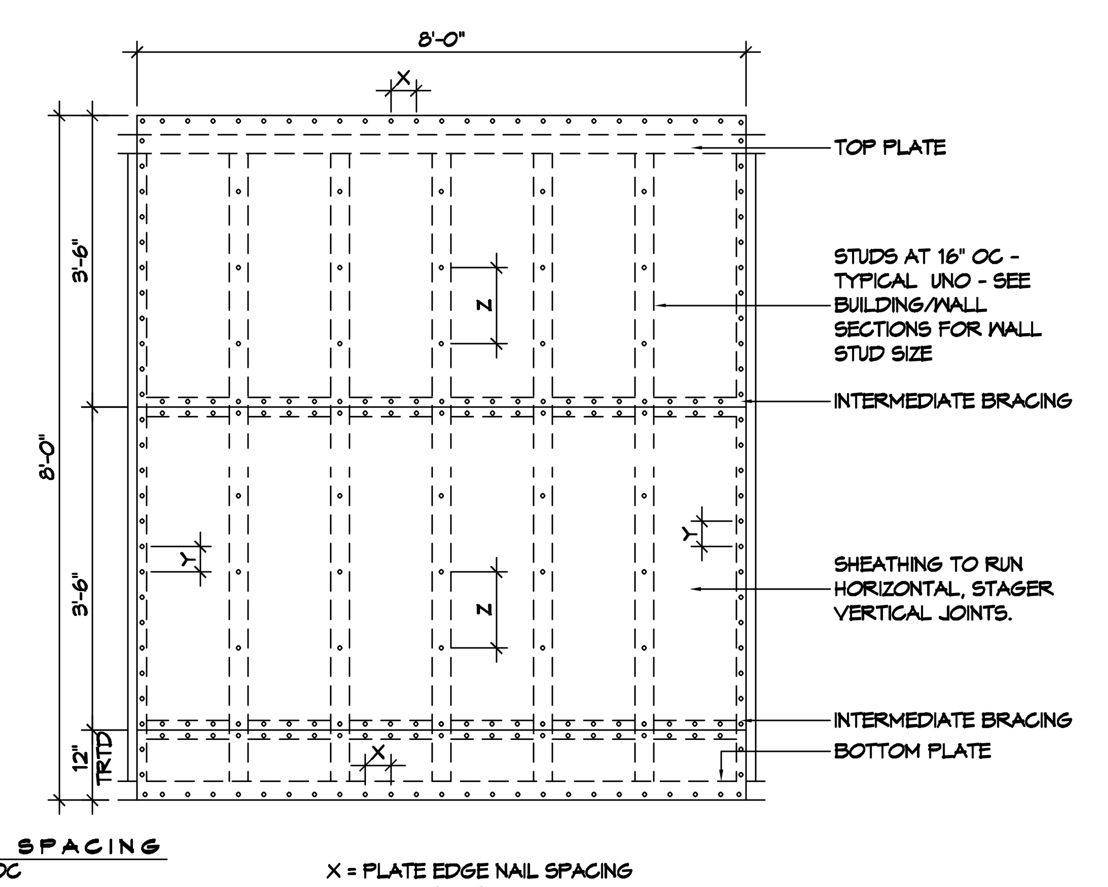

NAIL SPACING
X = 4" OC
Y = 4" OC
Z = 12" OC

X = PLATE EDGE NAIL SPACING
Y = LONG EDGE NAIL SPACING
Z = FIELD NAIL SPACING

(H) SHEAR WALL EXTERIOR SHEATHING NAILING PATTERN

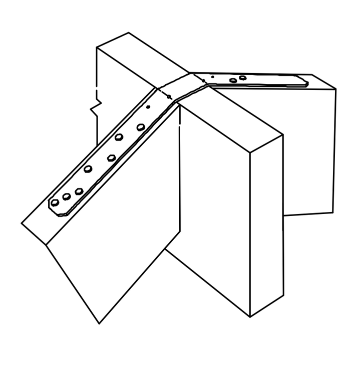

SIMPSON STRONG-TIE

AT ALL RIDGE CONNECTIONS

(G) RIDGE BEAM/BOARD

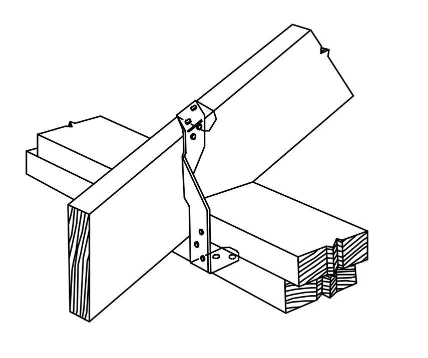

SIMPSON STRONG-TIE

(F) TOP PLATE TO RAFTER

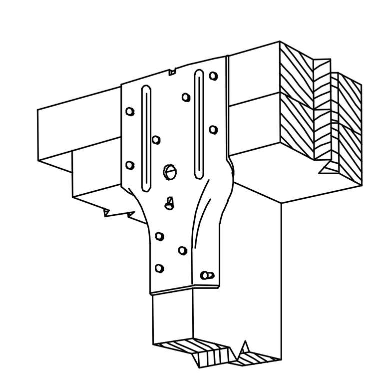

SIMPSON STRONG-TIE

(E) STUD TO TOP PLATE

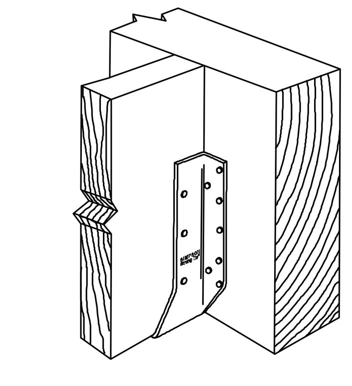

SIMPSON STRONG-TIE

(D) FLOOR JOIST

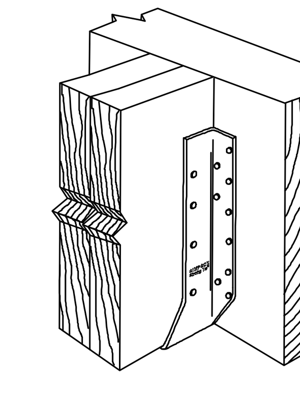

SIMPSON STRONG-TIE

(C) DBL FLOOR JOIST

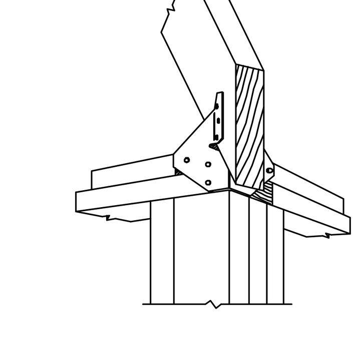

SIMPSON STRONG-TIE

(B) HIP RAFTER

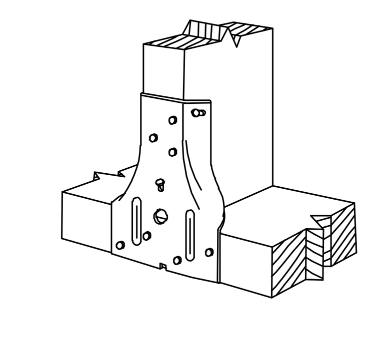

SIMPSON STRONG-TIE

(A) STUD TO SILL PLATE

TYPICAL CONNECTION DETAILS

SCALE: NTS

TABLE S102.1 - ROOF SHEATHING OR CLADDING REQUIREMENT - 130 MPH WIND LOAD EXP "C"

SHEATHING LOCATION	RAFTER / TRUSS SPACING	E	F
		MAX NAIL SPACING FOR 8d COMMON NAILS OR 10d BOX NAILS (INCHES OC)	
INTERIOR ZONE	12" OC	6	12
	16" OC	6	12
	24" OC	6	12
PERIMETER EDGE ZONE	12" OC	6	12
	16" OC	6	12
	24" OC	6	6

110 MPH WIND - EXPOSURE "C" TYPICAL
E = NAIL SPACING AT PANEL EDGES, INCHES.
F = NAIL SPACING AT INTERMEDIATE SUPPORTS IN THE PANEL FIELD, INCHES.

TABLE S102.2 - WALL SHEATHING OR CLADDING REQUIREMENT - 130 MPH WIND LOAD EXP "C"

SHEATHING LOCATION	STUD SPACING	E	F
		MAX NAIL SPACING FOR 8d COMMON NAILS OR 10d BOX NAILS (INCHES OC)	
INTERIOR ZONE	12" OC	6	12
	16" OC	6	12
	24" OC	6	12
PERIMETER EDGE ZONE	12" OC	6	12
	16" OC	6	12
	24" OC	6	12

110 MPH WIND - EXPOSURE "C" TYPICAL
E = NAIL SPACING AT PANEL EDGES, INCHES.
F = NAIL SPACING AT INTERMEDIATE SUPPORTS IN THE PANEL FIELD, INCHES.

WIND SPEED

THE CONSTRUCTION FOR SAID RESIDENCE, WHERE Vult WIND SPEED IS 130 mph and Vasd WIND SPEED IS 110 mph, WIND EXPOSURE ZONE C. THIS DESIGN IS IN ACCORDANCE WITH: AMERICAN WOOD COUNCIL, WOOD FRAME CONSTRUCTION MANUAL FOR ONE AND TWO FAMILY DWELLINGS (WFCM) 2015 EDITION AS WELL AS THE INTERNATIONAL RESIDENTIAL CODE (IRC) 2015 EDITION.

DAMMON ENGINEERING, INC.
LOUISIANA & MISSISSIPPI
www.dammonengineering.com
info@dammonengineering.com
PH: 985.649.5832
Chief Engineer: Brian Mistich, PE
554 Old Spanish Trail
Slidell, LA 70458

REVISIONS
| DESCRIPTION | DATE

SEAL:

CHASE JACOBS
643 CITRUS STREET
SLIDELL, LA. 70460

JOB No:
DATE: 03-02-22
DRAWN BY: CKD
CHECKED BY: BAM

The above drawings and specifications, designs and arrangements represented thereby are and shall remain the property of Dammon Engineering, and no part thereof shall be copied, disclosed to others, or used in connection with any work or project other than the specific project for which the have been prepared and developed without written consent of Dammon Engineering. Visual contact with these drawing or specifications shall constitute conclusive evidence of acceptance of these restrictions.

SHEET TITLE:
TYPICAL CONNECTION DETAILS, SCHEDULES, AND NOTES

DRAWING NUMBER:
A103