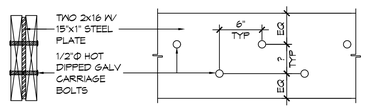

SECTION ELEVATION

FLITCH BEAM DETAIL

SCALE: 1/8" = 1' - 0"

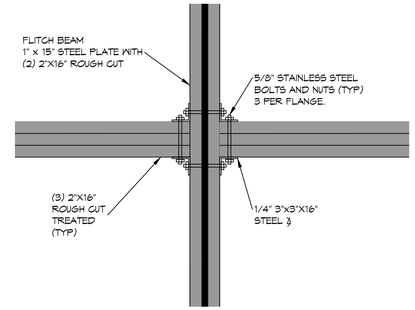

ROUGH CUT TO FLITCH BEAM CONNECTION

SCALE: 1" = 1' - 0"

GENERAL NOTES

1. ALL LUMBER SHALL BE PRESSURE TREATED WITH A RETENTION OF .4 PER C.F.
2. ALL FASTENERS SHALL BE HOT DIPPED GALVANIZED (HDG) PER ASTM A153.
3. ALL CONNECTORS SHALL BE HDG PER ASTM A653, CLASS G185 SHEET WITH 1.85 OZ/SF ZINC COATING.
4. TRIPLE UP FLOOR JOIST UNDER TUBS AND INTERIOR LOAD BEARING WALLS.

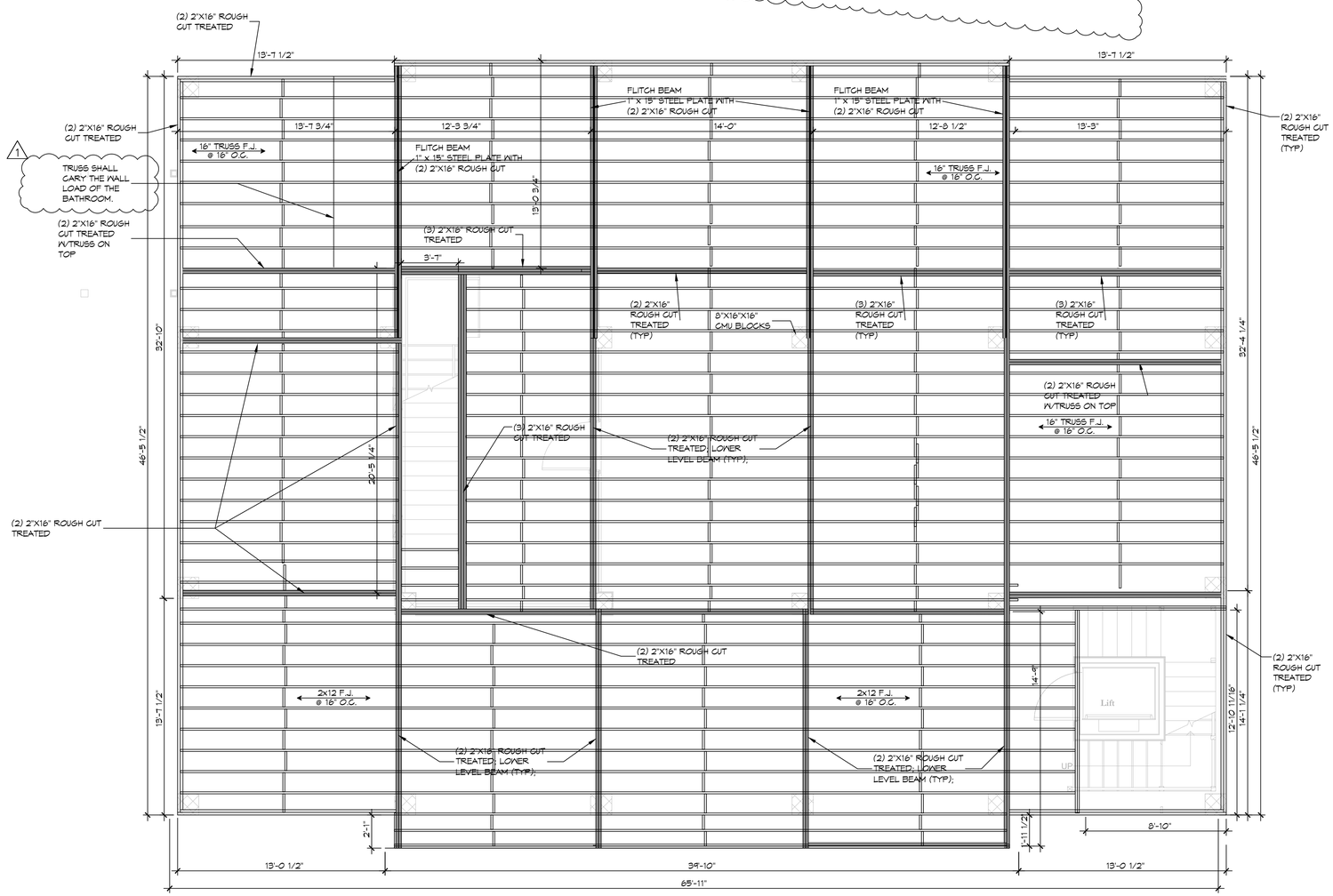

3 FLOORING FRAMING PLAN

SCALE: 1/4" = 1'-0"

LEVEL TWO

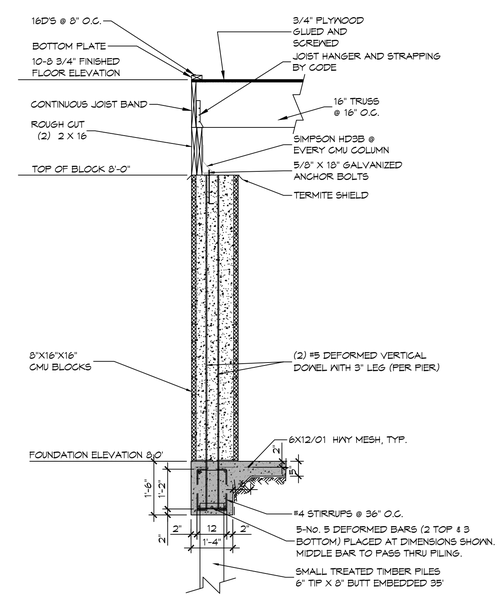

C S101 S101 SECTION

SCALE: 1/2" = 1' - 0"

CMU ON GRADE BEAM

DAMMON ENGINEERING, INC.
LOUISIANA & MISSISSIPPI
www.dammonengineering.com
info@dammonengineering.com
PH: 985-649-5822

Chief Engineer: Brian Mistich, PE
554 Old Spanish Trail
Slidell, LA 70458

REVISIONS

#	DESCRIPTION	DATE
1	FLITCH BEAM DETAILS AND NOTE	02-14-24

STATE OF LOUISIANA
BRIAN A. MISTICH
License No. 30187
PROFESSIONAL ENGINEER

BRENDA AND JOHN CASE RESIDENCE

34519 LOWRY LANE
SLIDELL, LA 70460

JOB No:
DRAWN BY: CKD
CHECKED BY: BAM
DATE: 02-01-2024

THIS DRAWING AND SPECIFICATIONS, INCLUDING BUT NOT LIMITED TO ARCHITECTURAL, STRUCTURAL, MECHANICAL, ELECTRICAL, PLUMBING, FIRE PROTECTION, CIVIL, LANDSCAPE AND SITE PLAN DESIGNS, IS THE PROPERTY OF DAMMON ENGINEERING, INC. AND MAY NOT BE REPRODUCED OR USED FOR ANY OTHER PROJECT OR WITHOUT THE EXPRESS WRITTEN CONSENT OF DAMMON ENGINEERING, INC. ©2022 DAMMON ENGINEERING, INC. ALL RIGHTS RESERVED.

SHEET TITLE:
FLOOR FRAMING PLAN
LEVEL TWO

DRAWING NUMBER:
S103

SHEET No: 3 of 6