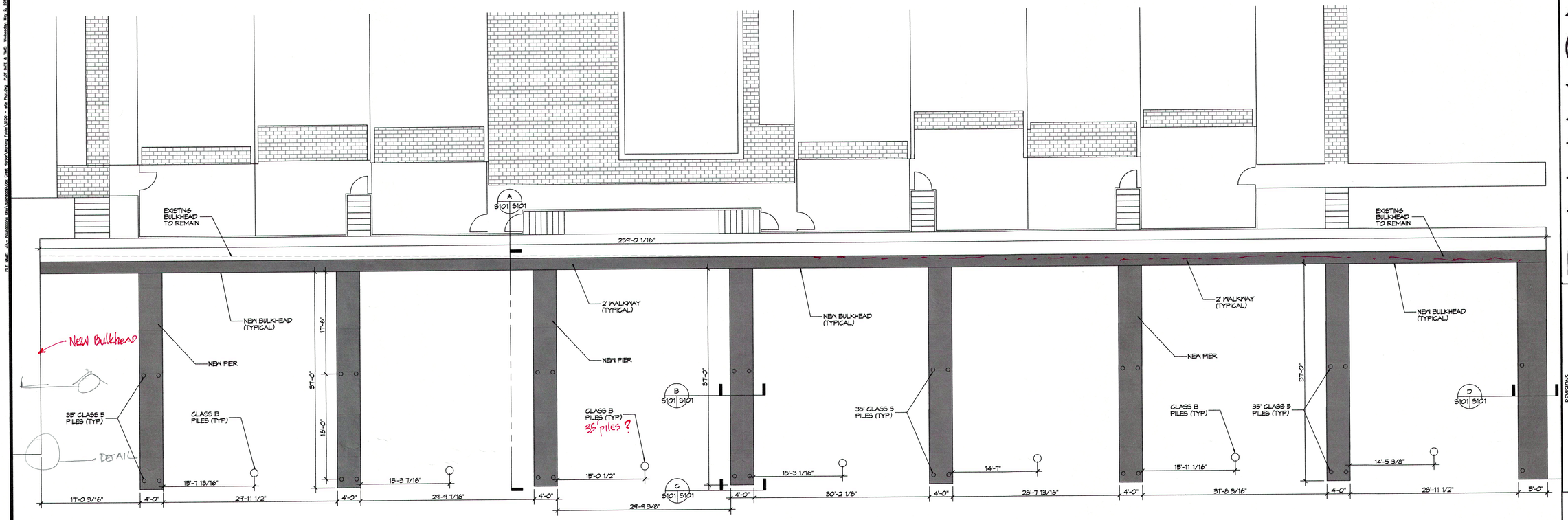

1 PARTIAL SITE PLAN

SCALE: 1"=10'-0"

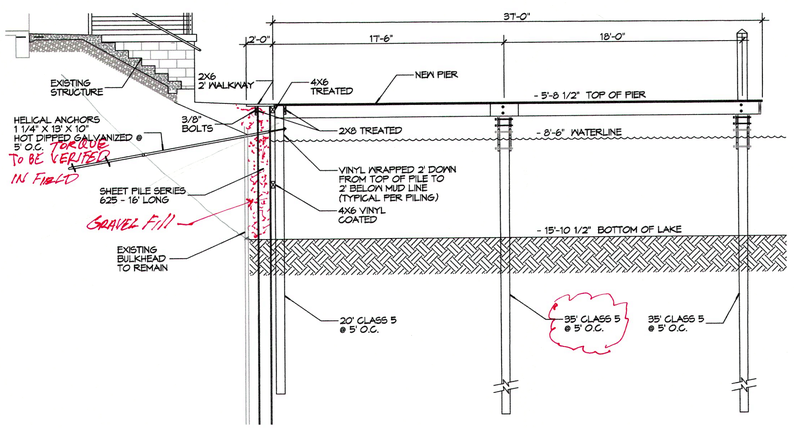

A PIER SECTION

S101 S101

SCALE: 3/16" = 1'-0"

PIER FRAMING

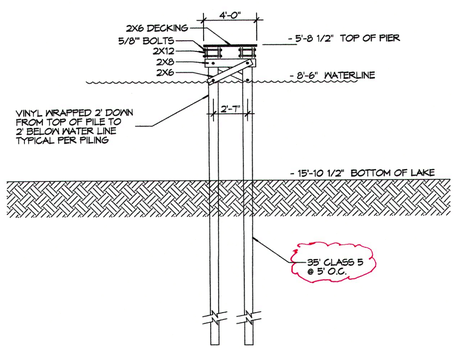

B PIER SECTION

S101 S101

SCALE: 3/16" = 1'-0"

PIER FRAMING

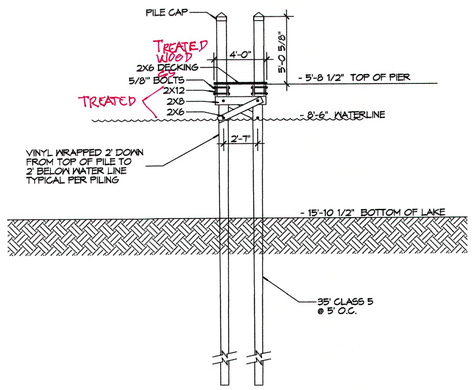

C PIER SECTION

S101 S101

SCALE: 3/16" = 1'-0"

PIER FRAMING

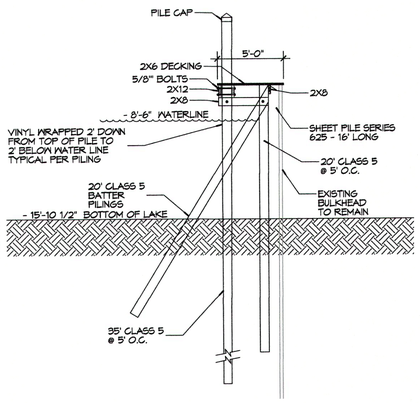

D PIER SECTION

S101 S101

SCALE: 3/16" = 1'-0"

PIER FRAMING

DAMMON ENGINEERING, INC.
554 Old Spanish Trail
Slidell, LA 70458
PH: 985.649.5832
www.dammonengineering.com
info@dammonengineering.com
Fax: 985.641.5950

#	DESCRIPTION	REVISIONS	DATE

STATE OF LOUISIANA
BRIAN A. MISTICH
License No. 30187
PROFESSIONAL ENGINEER

NEW BOAT DOCKS
OAK CREST HARBOUR
505 JACKSON AVE
MANDEVILLE, LA.

JOB NO:	2342
DATE:	04-24-18
DRAWN BY:	GKD
CHECKED BY:	BAM

The dam contents of property of Dammon Engineering, Inc. and shall not be used for other projects or be copied or reproduced in any form or manner without the written consent of Dammon Engineering, Inc. Failure to obtain such consent will be considered a violation of copyright laws.

SHEET TITLE:
PARTIAL SITE PLAN AND FRAMING SECTIONS

DRAWING NUMBER:
S101

SHEET No: 1 of 1