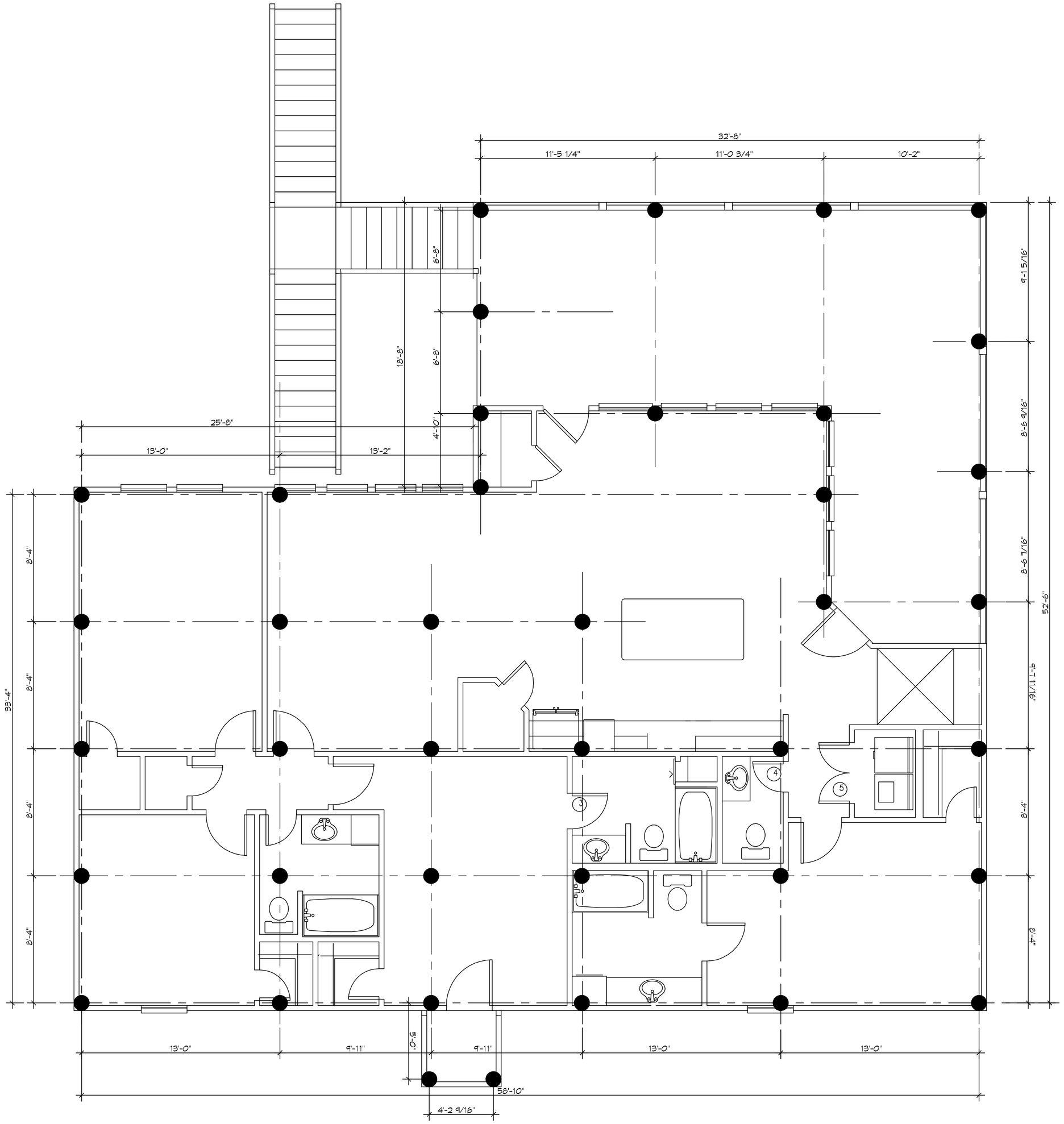

1 S101|S101 PILING PLAN
SCALE: 1/4" = 1'-0"
PILING PLAN

PILING NOTES

1. PILES ARE TO BE CLASS B MODIFIED AND ALL PILES ARE TO BE 40 FT. IN LENGTH WITH A 8 INCH TIP AND 12" BUTT.
2. ALL PILES SHALL BE PRESSURE-TREATED ROUND TIMBER PILES CONFORMING TO ASTM D25.
2. DESIGN LOAD = 6 TONS PER PILE.
3. NO FIELD SUPERVISION OR INSPECTION PROVIDED UNDER THIS SEAL UNLESS OTHERWISE NOTED.
4. PILE LAYOUT MAY BE MODIFIED DUE TO ACTUAL DRIVING CONDITIONS. ENGINEER TO BE NOTIFIED ON ANY MODIFICATION.
6. A PILE BLOW COUNT LOG OF ALL PILES IS TO BE SUBMITTED TO THE ENGINEER OF RECORD. FAILURE TO SUBMIT SAID LOG WILL RELEASE THE ENGINEER OF ALL RESPONSIBILITY.
7. CONTRACTOR IS RESPONSIBLE FOR THE COMPARISON & VERIFICATION OF PILE LAYOUT DIMENSIONS WITH MOST RECENT ARCHITECTURAL DRAWINGS, ASSURING THAT PILES DO FALL WITHIN LIMITS OF THE DESIGN
8. USE DROP HAMMER OR SINGLE ACTING AIR HAMMER DELIVERING 7,500 FT-LBS OF ENERGY PER BLOW. RAM WEIGHT OF DROP HAMMER SHALL NOT EXCEED 2,500 TO 3,000 LBS AND THE DROP SHOULD NOT EXCEED 3 FT., AT MINIMUM OF 25 BLOWS PER FOOT. IF THE DROP EXCEEDS 3 FT., CONTACT ENGINEER FOR INSTRUCTIONS.

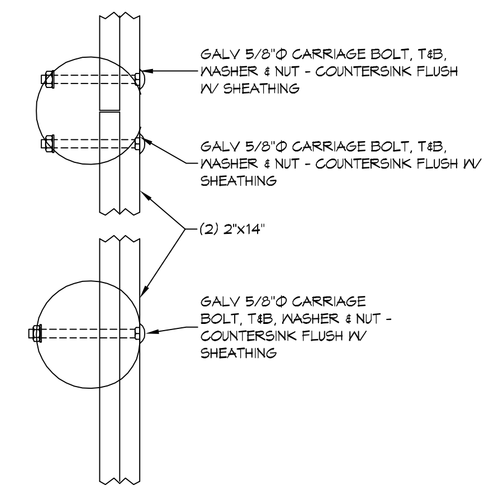

3 S101|S101 DETAIL
SCALE: 1/4" = 1'-0"
PERIMETER BAND

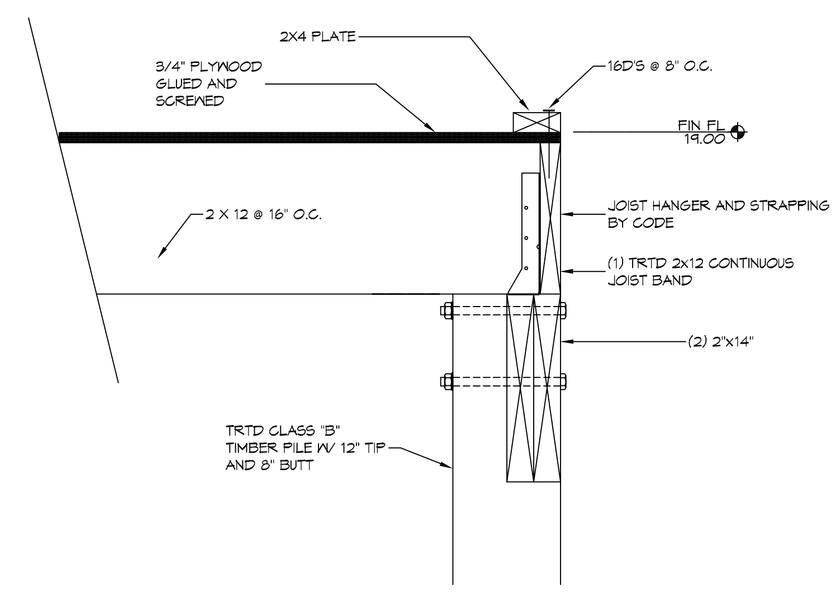

2 S101|S101 DETAIL
SCALE: 1/4" = 1'-0"
PERIMETER JOIST BAND

DAMMON ENGINEERING, INC.
554 Old Spanish Trail
Slidell, LA 70458
PH: 985.649.5832
www.dammonengineering.com
info@dammonengineering.com
Fax: 985.641.5950

#	DESCRIPTION	DATE
	REVISIONS	

SEAL:

RALPH RAMPANILE
LOT 20, HWY 190
SLIDELL, LOUISIANA 70458

JOB No:	2251
DATE:	02-20-17
DRAWN BY:	CKD
CHECKED BY:	BAM

This drawing is protected by copyright. Copyright 2016 Dammon Engineering, Inc. All rights reserved. Unauthorized use or reproduction of this drawing in any form, including but not limited to, the ideas, designs, arrangements and plans indicated or represented by this drawing, is prohibited without the express written consent of Dammon Engineering, Inc. Dammon Engineering, Inc. expressly reserves its property rights in this drawing. Any person obtaining this drawing or any information from this drawing agrees to be bound by the foregoing restrictions.

SHEET TITLE:
PILING PLAN

DRAWING NUMBER:
S101

SHEET No: 1 of # 2

FILE NAME: J:_REDESIGN\new dwg\Working drawings\S101-Foundation Plan.dwg PLOT DATE & TIME: Tuesday, February 21, 2017 1:53:49 PM