PLUMBING FIXTURE SCHEDULE

MARK	DESCRIPTION	TYPE	ROUGH-IN-SIZES				MODEL
			WASTE	VENT	C/W	H/W	
WC	WATER CLOSET	VALVE	4"	4"	1/2"	-	KOHLER K-3575
L1	LAVATORY	-	2"	2"	1/2"	1/2"	KOHLER R2699-4-0 & MOEN 84229SRN
S1	SINK	-	2"	2"	1/2"	1/2"	MOEN G202334 & KINGSTON NLGS88878CTL
WM	WASHING MACHINE	-	2"	2"	1/2"	1/2"	OWNER SUPPLIED
BT1	BATHTUB	-	2"	2"	1/2"	1/2"	KOHLER K-715 & MOEN T2703EPBN
DW	DISHWASHER	-	2"	2"	1/2"	1/2"	OWNER SUPPLIED

PLUMBING LEGEND

- ELBOW UP
- ELBOW DOWN
- DIRECTION OF FLOW
- TEE OFF TOP
- TEE OFF BOTTOM
- BALL VALVE
- CHECK VALVE (BACK FLOW PREVENTER)
- POINT BETWEEN NEW AND EXISTING
- FLEXIBLE CONNECTION
- SHOWER HEAD
- HB — HOSE BIB
- D/W — NEW DOMESTIC WATER LINE
- C/W — NEW COLD WATER LINE
- H/W — NEW HOT WATER LINE

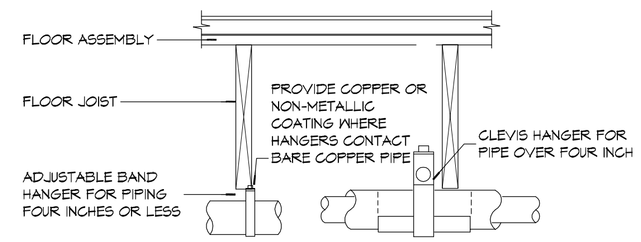

NOTES:

1. PROVIDE GALVANIZED STEEL SADDLE FOR ALL INSULATED PIPE LARGER THAN 3/4". VERIFY INSULATION THICKNESS WHEN SIZING HANGERS.
2. PROVIDE UPPER ATTACHMENT AS REQUIRED FOR CASES NOT SHOWN HERE. DO NOT INSTALL HANGER INSIDE INSULATION OR OTHERWISE PENETRATE VAPOR BARRIER. DO NOT HANG ONE PIPE FROM ANOTHER EXCEPT IN CHASES. TRAPEZE HANGERS MAY BE USED FOR MULTIPLE PARALLEL PIPES. HANGER SPACING FOR PIPE SIZE: COPPER: 4"=12' 3"=11' 2-1/2"=10' 2"=9' 1-1/2"=8' 1-1/4"=7' 1"=6' 3/4"=6' 1/2"=5'. CAST IRON: 10' AND ONE NEAR ALL JOINTS. STEEL: 4"=14' 3"=12 2-1/2"=11' 2"=10' 1-1/2"=9' 1"=7' 3/4"=6' 1/2"=5'. LOCATE HANGERS AS CLOSE AS POSSIBLE TO TURNS AND TEES OF PIPE. PROVIDE SUPPLEMENTARY STEEL STRUTS BETWEEN JOISTS IF REQUIRED.LOCATE HANGERS TO TAKE LOAD OFF OF EQUIPMENT CONNECTIONS. ANCHOR WATER PIPE AGAINST SWAYING DUE TO CHANGES IN WATER VELOCITY. PROVIDE SEISMIC BRACING IF/AS REQUIRED BY LOCAL AUTHORITIES. CHAINS OR PERFORATED STRAP IRON OR STEEL IS NOT ACCEPTABLE. REFER TO CODES FOR FURTHER INFORMATION.

3 P2 P2 PLUMBING DETAIL
SCALE: N.T.S.
TYPICAL PIPE HANGER

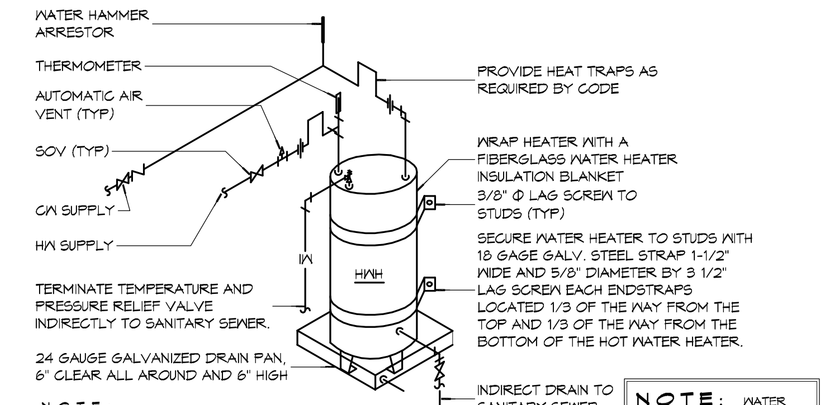

NOTE: PROVIDE WATERTIGHT PAN WITH 1" DRAIN UNDER WATER HEATER.

NOTE: WATER HEATER TEMPERATURE TO BE SET AT 140° F. PROVIDE TEMPERING VALVE (SET @ 110°F) AS SHOWN FOR ALL HAND SINK & SHOWER HOT WATER SUPPLIES.

4 P2 P2 PLUMBING DETAIL
SCALE: N.T.S.
WATER HEATER DIAGRAM

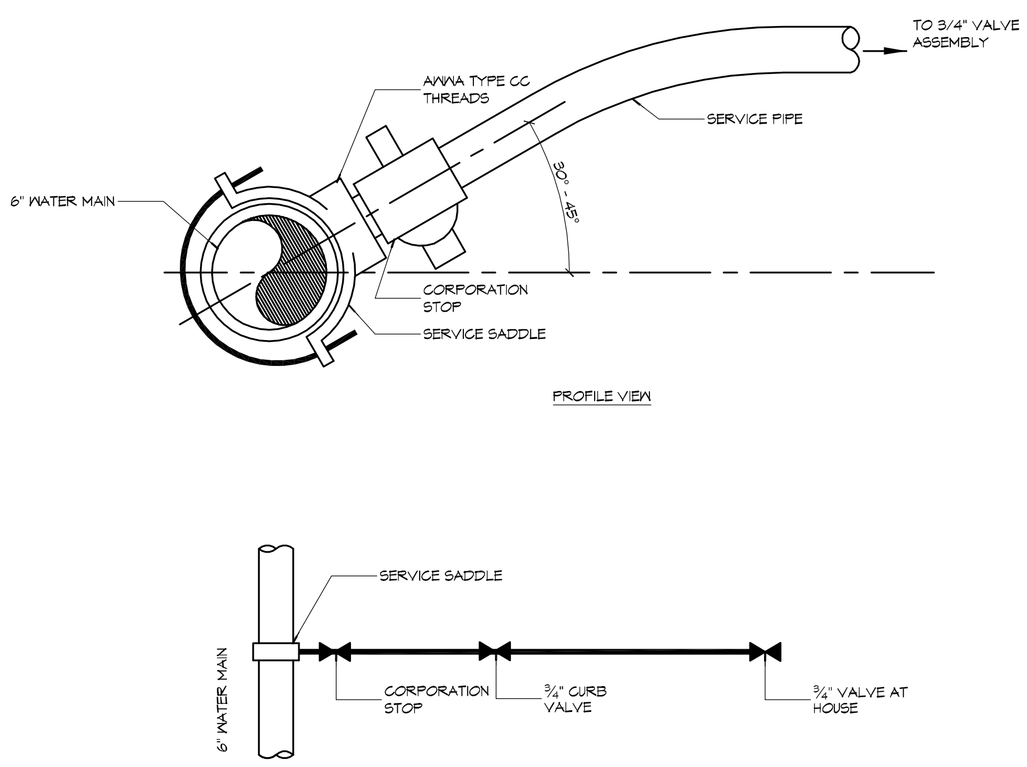

WATER SERVICE DETAIL

2 P2 P2 PLUMBING DETAIL
SCALE: N.T.S.
DOMESTIC WATER SERVICE

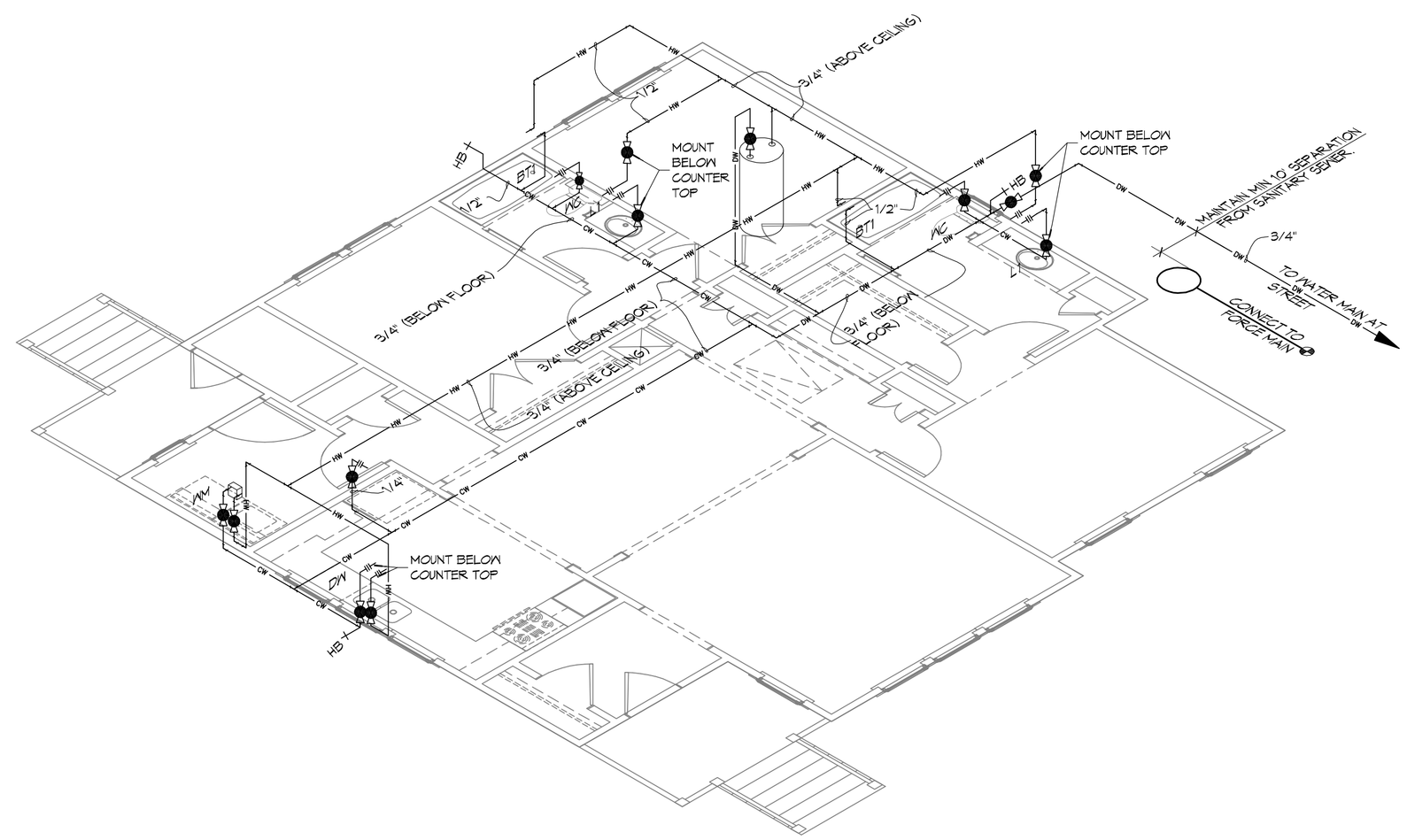

1 P2 P2 PLUMBING RISER DIAGRAM
SCALE: 1/4" : 1'-0"
DOMESTIC WATER

DAMMON ENGINEERING, INC.
Architects & Engineers
www.dammoneng@engineering.com
info@dammoneng@engineering.com
Phone: 985.649.5932
F: 985.641.5950
Chief Architect: Kevin J. Kinchen, NCARB
Chief Engineer: Brian Mistich, PE
Civil Engineer: Jim Vidal
Slidell, LA 70458

REVISIONS

#	DESCRIPTION	DATE

SEAL: KEVIN J. KINCHEN Reg. No. 8582 STATE OF LOUISIANA REGISTERED ARCHITECT Expires 2014

95% SUBMITTAL NOT FOR CONSTRUCTION

LOUISIANA ARMY NATIONAL GUARD

CAMP VILLERE NEW HOME CONSTRUCTION

CAMP VILLERE, LOUISIANA

JOB No:	2210
DATE:	AUGUST 22, 2014
DRAWN BY:	KJK
CHECKED BY:	CKD

This set of drawings and specifications, original and amended, is the property of Dammon Engineering, Inc. and is to be returned on request. All reproduction or other use without the written consent of Dammon Engineering, Inc. is prohibited. Any alteration of this document is a violation of the Louisiana State Law governing the practice of Architecture and Engineering. Only original sets have the proper seal and signature and are valid for construction purposes. Copyright © 2014 Dammon Engineering, Inc.

SHEET TITLE:
PLUMBING DOMESTIC WATER PLANS, RISER DIAGRAMS AND NOTES

DRAWING NUMBER:
P2

SHEET No: 12 of 12