PLUMBING FIXTURE SCHEDULE

MARK	DESCRIPTION	TYPE	ROUGH-IN-SIZES				MODEL
			WASTE	VENT	C/W	H/W	
WC	WATER CLOSET	VALVE	4"	4"	1/2"	-	KOHLER K-3575
L1	LAVATORY	-	2"	2"	1/2"	1/2"	KOHLER R2699-4-0 & MOEN 84229SRN
S1	SINK	-	2"	2"	1/2"	1/2"	MOEN 6202334 & KINGSTON KLGS88878CTL
WM	WASHING MACHINE	-	2"	2"	1/2"	1/2"	OWNER SUPPLIED
BT1	BATHTUB	-	2"	2"	1/2"	1/2"	KOHLER K-715 & MOEN T2703EPBN W/ POSI-TEMP VALVE
DW	DISHWASHER	-	2"	2"	1/2"	1/2"	OWNER SUPPLIED

PLUMBING LEGEND

- ELBOW UP
- ELBOW DOWN
- DIRECTION OF FLOW
- TEE OFF TOP
- TEE OFF BOTTOM
- BALL VALVE
- CHECK VALVE (BACK FLOW PREVENTER)
- POINT BETWEEN NEW AND EXISTING
- FLEXIBLE CONNECTION
- SHOWER HEAD
- HB — HOSE BIB
- D/W — NEW DOMESTIC WATER LINE
- C/W — NEW COLD WATER LINE
- H/W — NEW HOT WATER LINE

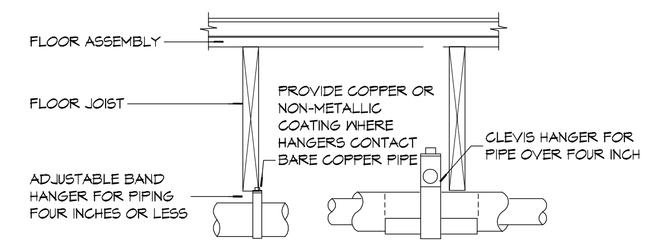

NOTES:

1. PROVIDE GALVANIZED STEEL SADDLE FOR ALL INSULATED PIPE LARGER THAN 3/4". VERIFY INSULATION THICKNESS WHEN SIZING HANGERS.
2. PROVIDE UPPER ATTACHMENT AS REQUIRED FOR CASES NOT SHOWN HERE. DO NOT INSTALL HANGER INSIDE INSULATION OR OTHERWISE PENETRATE VAPOR BARRIER. DO NOT HANG ONE PIPE FROM ANOTHER EXCEPT IN CHASES. TRAPEZE HANGERS MAY BE USED FOR MULTIPLE PARALLEL PIPES. HANGER SPACING FOR PIPE SIZE: COPPER: 4"=12' 3"=11' 2-1/2"=10' 2"=9' 1-1/2"=8' 1-1/4"=7' 1"=6' 3/4"=6' 1/2"=5'. CAST IRON: 10' AND ONE NEAR ALL JOINTS. STEEL: 4"=14' 3"=12' 2-1/2"=11' 2"=10' 1-1/2"=9' 1"=7' 3/4"=6' 1/2"=5'. LOCATE HANGERS AS CLOSE AS POSSIBLE TO TURNS AND TEES OF PIPE. PROVIDE SUPPLEMENTARY STEEL STRUTS BETWEEN JOISTS IF REQUIRED.LOCATE HANGERS TO TAKE LOAD OFF OF EQUIPMENT CONNECTIONS. ANCHOR WATER PIPE AGAINST SWAYING DUE TO CHANGES IN WATER VELOCITY. PROVIDE SEISMIC BRACING IF/AS REQUIRED BY LOCAL AUTHORITIES. CHAINS OR PERFORATED STRAP IRON OR STEEL IS NOT ACCEPTABLE. REFER TO CODES FOR FURTHER INFORMATION.

3 P2 P2 PLUMBING DETAIL
SCALE: N.T.S. TYPICAL PIPE HANGER

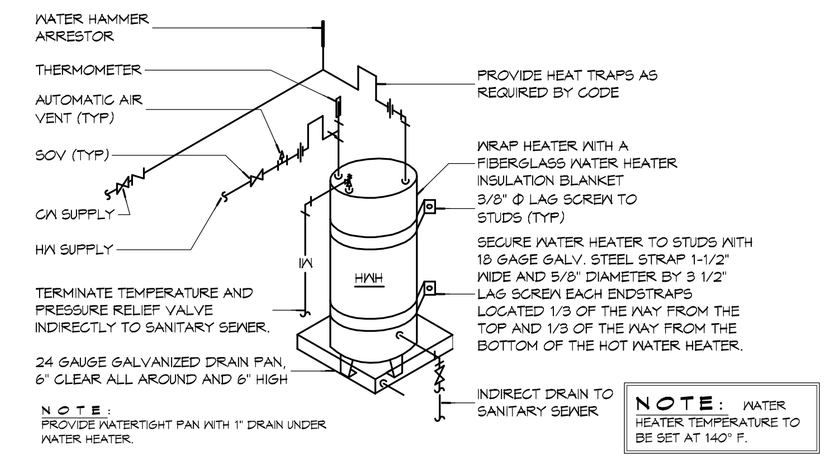

NOTE: PROVIDE WATERTIGHT PAN WITH 1" DRAIN UNDER WATER HEATER.

NOTE: WATER HEATER TEMPERATURE TO BE SET AT 140° F.

4 P2 P2 PLUMBING DETAIL
SCALE: N.T.S. WATER HEATER DIAGRAM

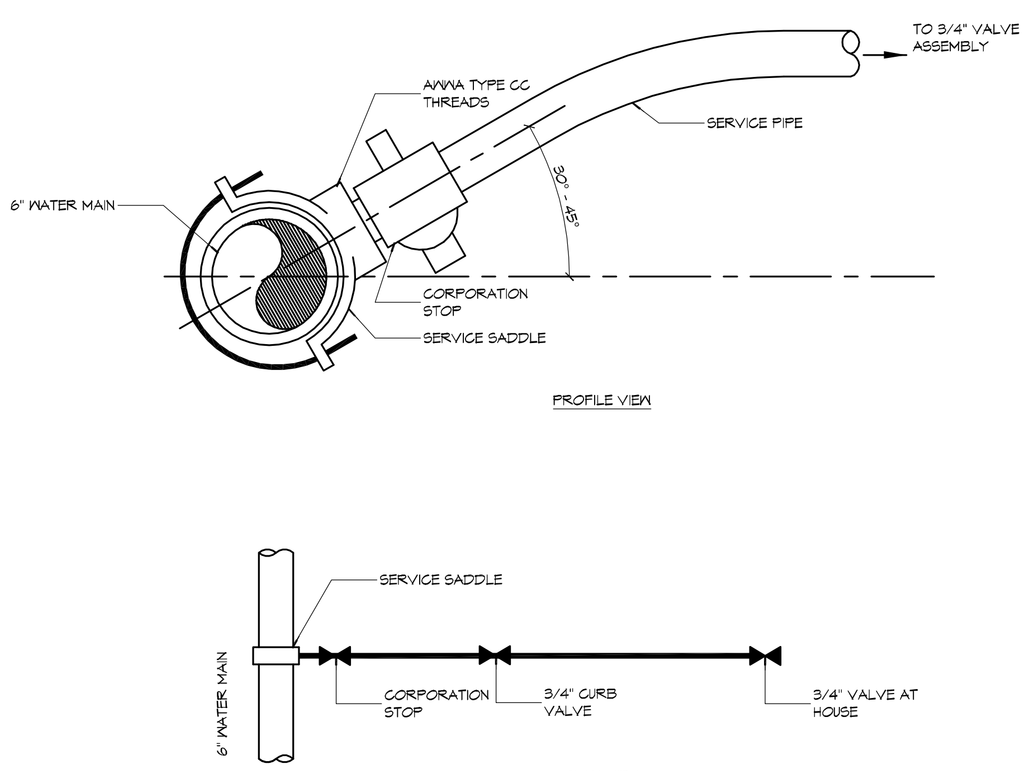

WATER SERVICE DETAIL

2 P2 P2 PLUMBING DETAIL
SCALE: N.T.S. DOMESTIC WATER SERVICE

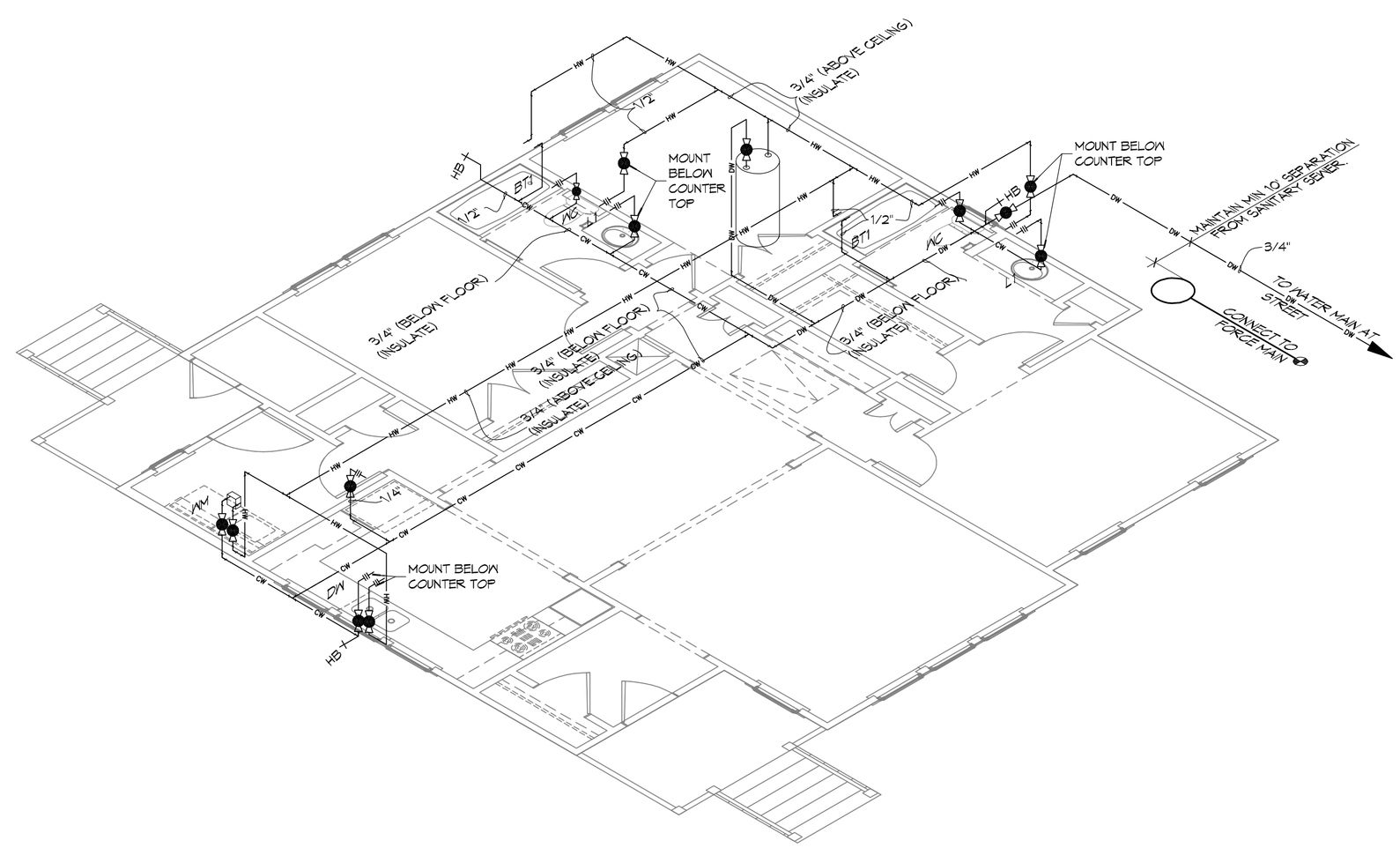

1 P2 P2 PLUMBING RISER DIAGRAM
SCALE: 1/4" : 1'-0" DOMESTIC WATER

DAMMON ENGINEERING, INC.
Architects & Engineers
www.dammonengineering.com
info@dammonengineering.com
P: 985.641.5322
F: 985.641.5950
Chief Architect: Kevin J. Kinchen, NCARB
Chief Engineer: Brian Mistich, PE
5504 Cleveland Trail
Slidell, LA 70458

#	DESCRIPTION	DATE

REVISIONS

SEAL: KEVIN J. KINCHEN Reg. No. 5592 STATE OF LOUISIANA REGISTERED ARCHITECT 10/9/2014

95% SUBMITTAL NOT FOR CONSTRUCTION

LOUISIANA ARMY NATIONAL GUARD

CAMP VILLERE NEW HOME CONSTRUCTION

LA 14-A-037

CAMP VILLERE, LOUISIANA

JOB No: 2210 DATE: OCTOBER 8, 2014

DRAWN BY: KJK CHECKED BY: CKD

The drawings, specifications and other documents, including but not limited to, the electronic files, prepared by Dammon Engineering, are the property of Dammon Engineering and shall be returned or destroyed upon request of Dammon Engineering. The reuse of these documents on other projects, in whole or in part, without written consent of Dammon Engineering is prohibited. Any modifications made to these documents without written consent of Dammon Engineering shall be at the sole risk of the person or entity making such modifications.

SHEET TITLE:
PLUMBING DOMESTIC WATER PLANS, RISER DIAGRAMS AND NOTES

DRAWING NUMBER:
P2

SHEET No: 12 of 12