MWFRS Wind Load Calculations

ASCE 7-10 Chapter 28 Wind Loads on Buildings; Envelope Procedure
Simple Diaphragm

Project: Tangipahoa Landfill Lean-To

Table 28.5-1 Enclosed Simple Diaphragm Low-Rise Buildings

1. Risk Category Table 1.5-1 & IBC 2012 Table 1604.5 — Cat I — Remote Location
2. Wind Speeds
   a. V_{ult} Wind Speed, by wesite atcouncil.org — 114 mph
   b. V_{asd} Nominal Wind Speed, by IBC 1609.3.1 — 88.3 mph
3. Wind load parameters
   a. Surface Roughness, Section 26.7.2: Roughness C
   b. Exposure Category, Section 26.7.3: Exposure C
   c. Topographic Factor, Section 26.8.2: K_{zt} = 1.85 (With Escarpment)
4. Wind Pressures Fig 28.6-1 — Load Case 1 for roof slope 0-5º

Interpolating Wind Speeds												
Basic Wind Speed	Roof Angle	Load Case	Horizontal Pressures, P_{s30} (psf)				Vertical Pressures, P_{s30} (psf)				Overhangs	
			A	B	C	D	E	F	G	H	Eoh	Goh
110 mph	0º - 5º	1	19.2	-10.0	12.7	-5.9	-23.1	-13.1	-16.0	-10.1	-32.2	-25.3
115 mph	0º - 5º	1	21.0	-10.9	13.9	-6.5	-25.2	-14.3	-17.5	-11.1	-35.3	-27.6
114	0º - 5º	1	20.6	-10.7	13.7	-6.4	-24.8	-14.1	-17.2	-10.9	-34.7	-27.1

5. Building mean height (h) = <15 ft — λ for Exposure C = 1.21 (Fig 28.6-1)
6. Adjusted wind pressure P_s = Equation 28.6-1 — $P_s = \lambda K_{zt} P_{s30} = 1.21 * 1.85 * P_{s30}$

Adjusted Wind Pressure Ps												
Basic Wind Speed	Roof Angle	Load Case	Horizontal Pressures, Ps (psf)				Vertical Pressures, Ps (psf)				Overhangs	
			A	B	C	D	E	F	G	H	Eoh	Goh
114	0º - 5º	1	46.2	-24.0	30.6	-14.3	-55.5	-31.5	-38.5	-24.4	-77.6	-60.8

7. Building Exempt from Torsion; Appendix D1.5.6 Case F; Class 1 building with 2.0 < L/B < 5.0

Prepared by: David Dammon
Date: 12/22/2017

Main Wind Force Resisting System – Method 2		h ≤ 60 ft.
Figure 28.6-1	Design Wind Pressures	Walls & Roofs
Enclosed Buildings		

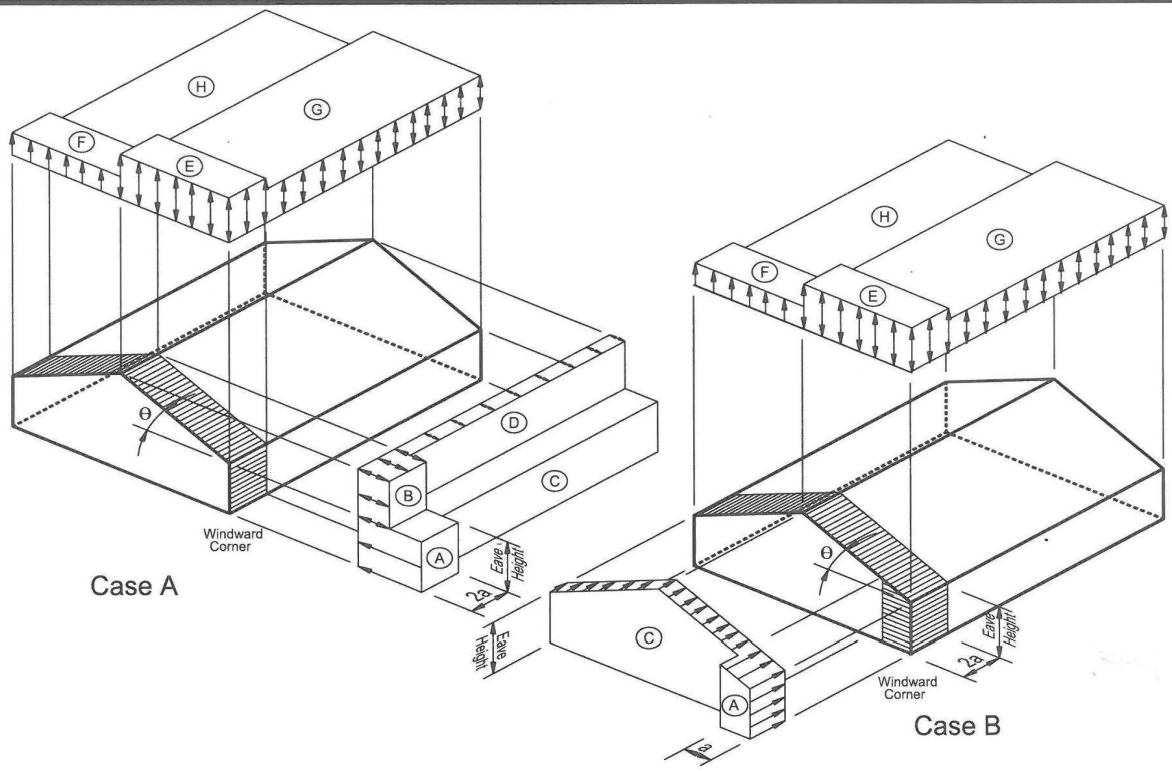

Notes:

1. Pressures shown are applied to the horizontal and vertical projections, for exposure B, at h=30 ft (9.1m). Adjust to other exposures and heights with adjustment factor λ.
2. The load patterns shown shall be applied to each corner of the building in turn as the reference corner. (See Figure 28.4-1)
3. For Case B use $\theta = 0°$.
4. Load cases 1 and 2 must be checked for $25° < \theta \leq 45°$. Load case 2 at 25° is provided only for interpolation between 25° and 30°.
5. Plus and minus signs signify pressures acting toward and away from the projected surfaces, respectively.
6. For roof slopes other than those shown, linear interpolation is permitted.
7. The total horizontal load shall not be less than that determined by assuming $p_S = 0$ in zones B & D.
8. Where zone E or G falls on a roof overhang on the windward side of the building, use E_{OH} and G_{OH} for the pressure on the horizontal projection of the overhang. Overhangs on the leeward and side edges shall have the basic zone pressure applied.
9. Notation:
   a: 10 percent of least horizontal dimension or 0.4h, whichever is smaller, but not less than either 4% of least horizontal dimension or 3 ft (0.9 m).
   h: Mean roof height, in feet (meters), except that eave height shall be used for roof angles <10°.
   θ: Angle of plane of roof from horizontal, in degrees.