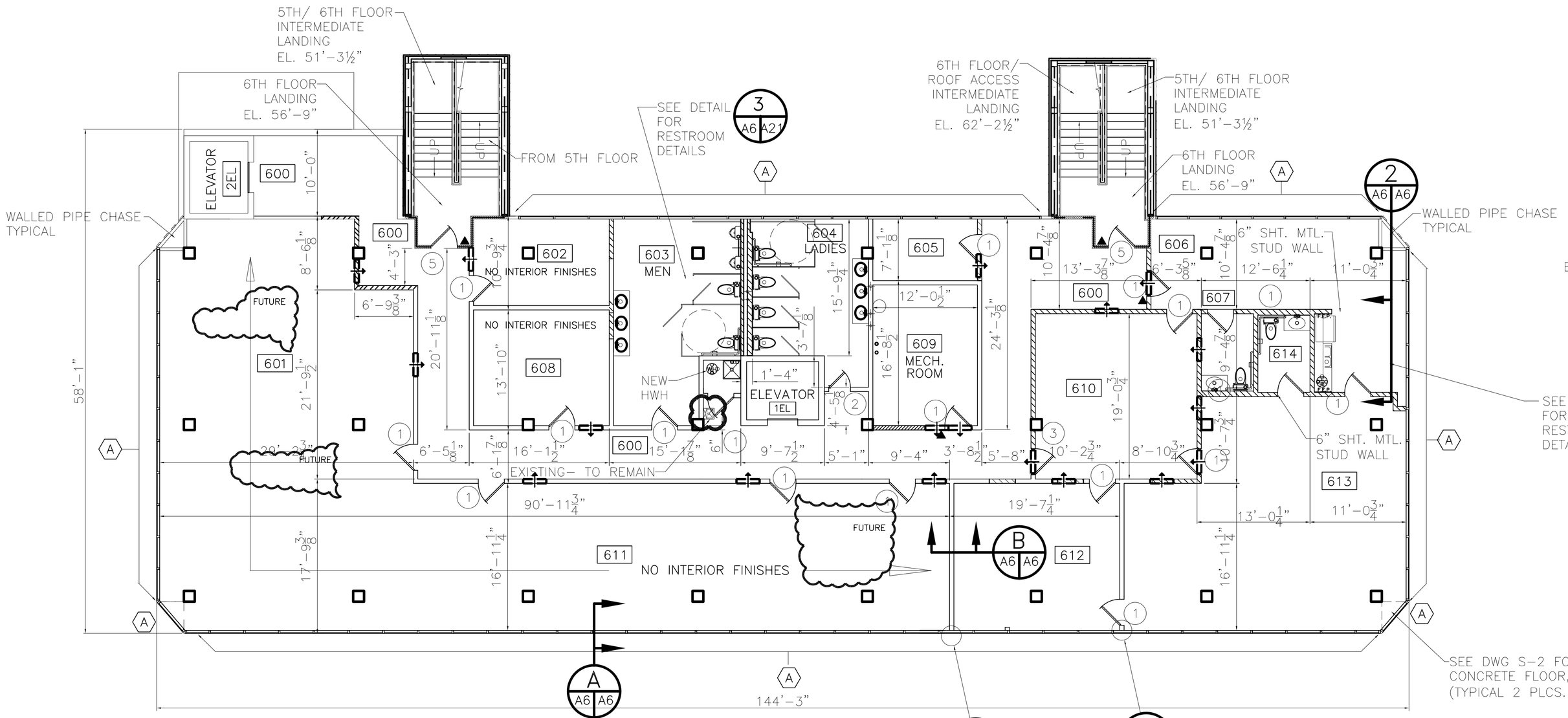

SIXTH FLOOR PLAN
SCALE: 1/8"= 1'-0"

1 A6 A6 TYPICAL

1 A6 A6 TYPICAL

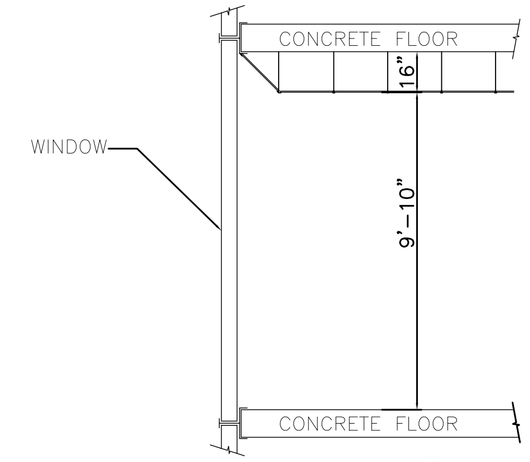

DETAIL A A6 A6
NTS

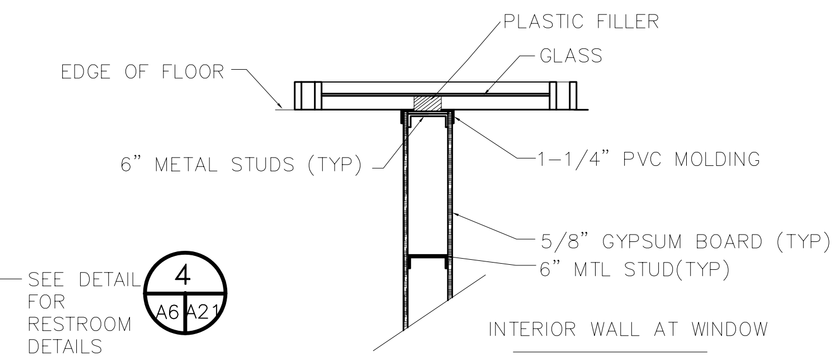

DETAIL 1 A6 A6
NTS

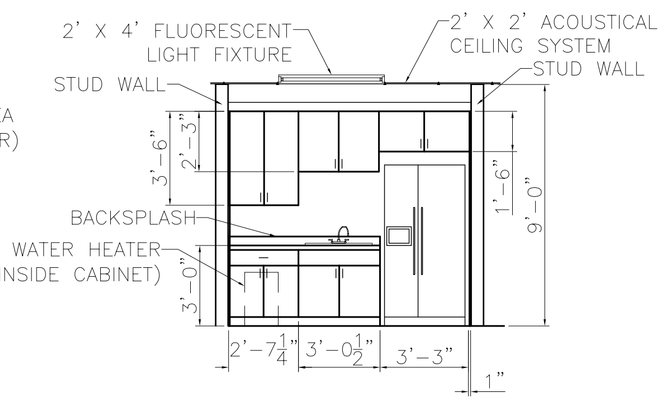

DETAIL 2 A6 A6
SCALE: 1/4" = 1'-0"

NOTE:
KITCHEN CABINETS SHALL BE MEDIUM COMMERCIAL GRADE, FACTORY BUILT. COUNTER TOPS SHALL BE MANMADE MARBLE OR EQUAL.

ADDENDUM 6 CHANGE

NOTE:
INSTALL DUCTWORK ENTRANCES AS REQUIRED. SEE DWG. M-6 FOR A/C DETAILS.

FINISH SCHEDULE

ROOM	FLOOR: CONCRETE	FLOOR: VINYL TILE	FLOOR: CARPET	FLOOR: CERAMIC TILE	FLOOR: PAINTED WOOD	BASE: CERAMIC TILE	BASE: VINYL	BASE: WOOD	BASE: NONE	WALLS: CERAMIC TILE	WALLS: GYPSUM BOARD	WALLS: GREENBOARD	WALLS: PAINT	WALLS: CONCRETE	CEILING: ACOUSTIC TILE	CEILING: GYPSUM BOARD	CEILING: FRP BOARD	CEILING: OPEN	CEILING: TEXT. CONC.	CLG HT	REMARKS
600		●					●				●		●		●					8'-6"	
601	●								●		●							●		9'-0"	
602		●							●		●		●					●		9'-0"	
603				●						●		●	●		●					9'-0"	
604				●						●		●	●		●					9'-0"	
605		●							●									●		9'-0"	
606			●				●				●		●		●					9'-0"	*
607																				9'-0"	
608		●							●									●		9'-0"	
609	●								●									●		10'-6"	
610			●				●				●		●		●					9'-0"	
611	●								●		●							●		9'-0"	
612			●				●				●		●		●					9'-0"	
613			●				●				●		●		●					9'-0"	*
614				●		●				●		●	●		●					9'-0"	*
615				●		●				●		●	●		●					9'-0"	*

*SEE SPEC FOR ALLOWANCE FOR INTERIOR DECORATING
UNDERCUT ALL DOORS 3/4" TO ALL FOR PROPER EXHAUST AIR FLOW

DOOR & HARDWARE SCHEDULE

DOOR		TYPE: SOLID WOOD	TYPE: HOLLOW METAL	TYPE: ALUM./GLASS	TYPE: STEEL	FRAME: MASONITE	FRAME: STEEL	FRAME: ALUMINUM	FRAME: WOOD	HINGE: CASED OPENING	HINGE: DOUBLE SWING	HINGE: BUTT 1 1/2 P	HINGE: BUROLAPROOF	HINGE: SLIDING	LOCK: PRIVACY	LOCK: DEADBOLT	LOCK: KEYED HANDLE	LOCK: PUSH PULL	ACCESSORIES: PANIC	ACCESSORIES: THRESHOLD	ACCESSORIES: WEATHERSTRIP	ACCESSORIES: DOOR STOP	ACCESSORIES: ALARM	ACCESSORIES: VIEW GLASS	ACCESSORIES: CLOSER	REMARKS
1	3/0x7/0	●					●					●					●					●				
2	3/0x7/0	●					●					●										●				
3	3/0x7/0	●					●					●						●								
4	3/0x7/0				●		●					●					●				●				●	
5	3/0x7/0	●					●					●					●			●		●			●	1 HOUR RATED

DOORS SHOWN WITH ▲ SHALL BE EQUIPPED WITH ELECTRIC STRIKE FOR CARD READER

WINDOW SCHEDULE

WINDOW		TYPE: FIXED	TYPE: VERTICAL SLIDE	TYPE: HORIZONAL SLIDE	TYPE: STORE FRONT	FRAME: STEEL	FRAME: ALUMINUM	FRAME: WOOD	GLASS: TINTED	GLASS: PLAIN	GLASS: GLAZED	GLASS: WIREGLASS	LITES: NONE	LITES: 2/2	LITES: 4/4	LITES: 6/6	LITES: 8/8	ACCESSORIES: ALARM	ACCESSORIES: SCREEN	ACCESSORIES: SHUTTER	ACCESSORIES: NONE	REMARKS
A	*4/0x5/0	●					●		●				●									APPROXIMATELY 3,700 SQ. FT.

*FINAL SIZES TO BE DETERMINED BY VENDOR FROM FIELD MEASUREMENTS [TYP. ALL FLOORS]

LEGEND

NEW WALL —
NEW 1 HOUR RATED WALL —
EXISTING WALL —
CURTAIN WALL —
SECURITY ACCESS DOOR – (SCANNER BY OTHERS) ▲
RETURN AIR CASED OPENING IN WALL – (ROOM TO CEILING)– TO EQUAL 200 SQ. IN.

= ADDENDUM 4 CHANGE

= 09/19/07 CHANGE

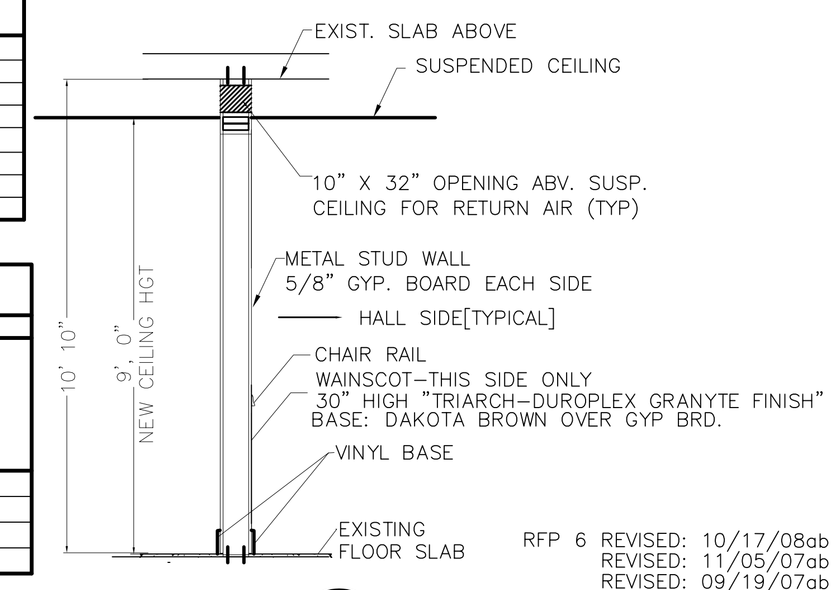

SECTION B A6 A6
NTS

RFP 6 REVISED: 10/17/08ab
REVISED: 11/05/07ab
REVISED: 09/19/07ab
ADDENDUM 4 REVISED: 08/20/07ab
REVISED: 05/17/07ab
REVISED: 04/09/07
REVISED: 02/19/07
REVISED: 01/22/07

CONTRACT SET- 10/10/07

6TH FLOOR RENOVATE PLAN

ST. TAMMANY PARISH ADMIN. COMPLEX
520 OLD SPANISH TRAIL
SLIDELL, LOUISIANA

RENOVATE OFFICE BUILDING

DAMMON ENGINEERING. INC.
1095 FLORIDA AVENUE 985-649-5832 SLIDELL, LA. 70458
DAMMONENGINEERING.COM

SCALE:AS NOTED
FILE:
JOB NO. 1729
DATE:1-8-07
SHEET
A-6
OF