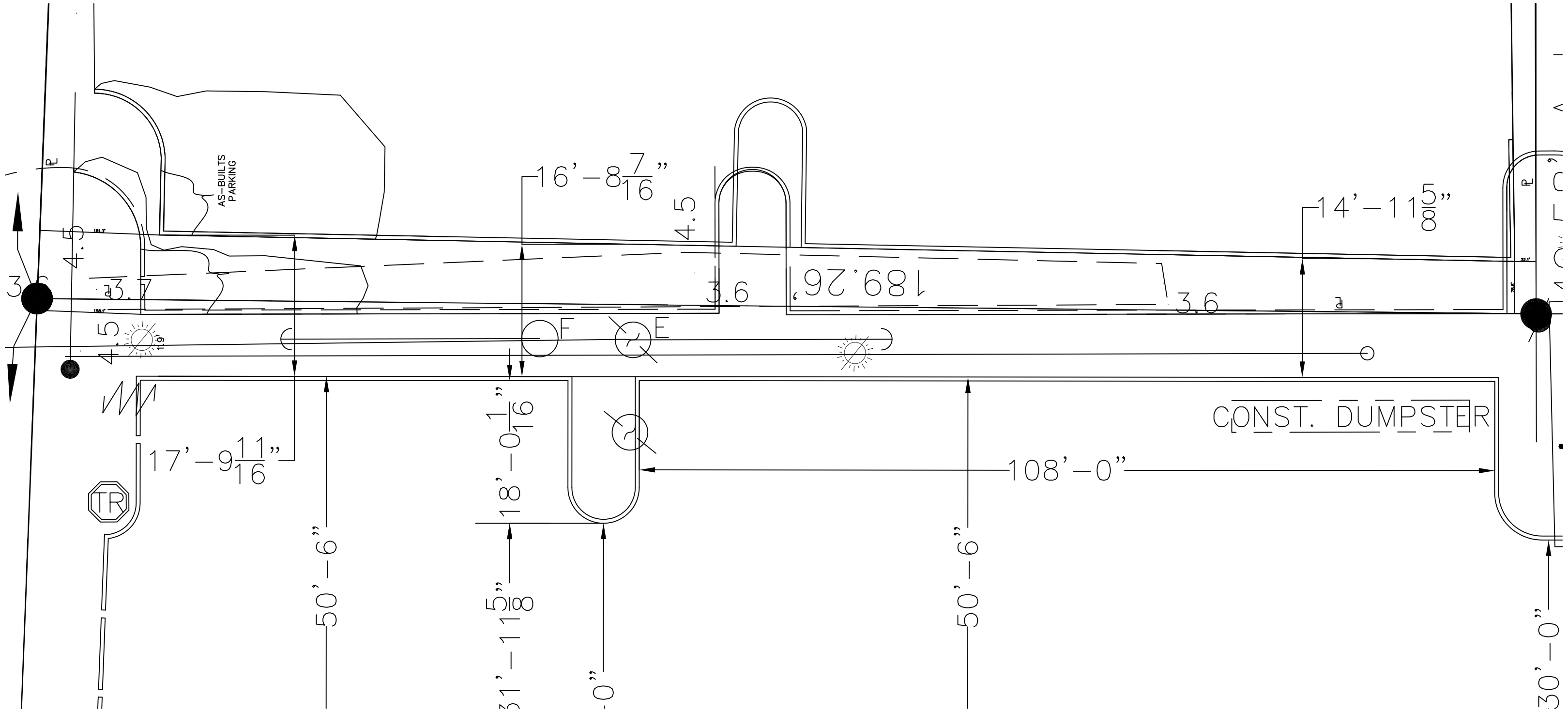
AS-BUILTS PARKING
16'-8 7/16"
4.5
3.6
189.26'
3.6
14'-11 5/8"
4.5
3.7
4.5
F
E
CONST. DUMPSTER
17'-9 11/16"
18'-0 1/16"
108'-0"
TR
50'-6"
31'-11 5/8"
0"
50'-6"
30'-0"