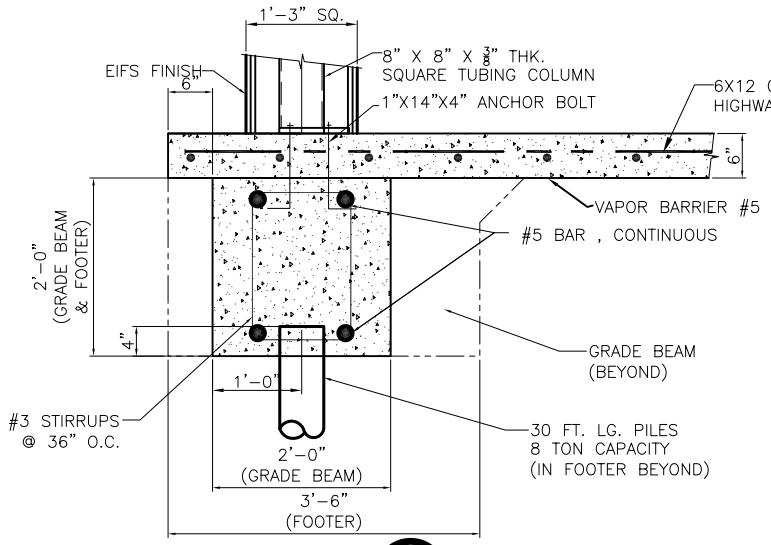

SECTION SC
SCALE: 1" = 1'-0"

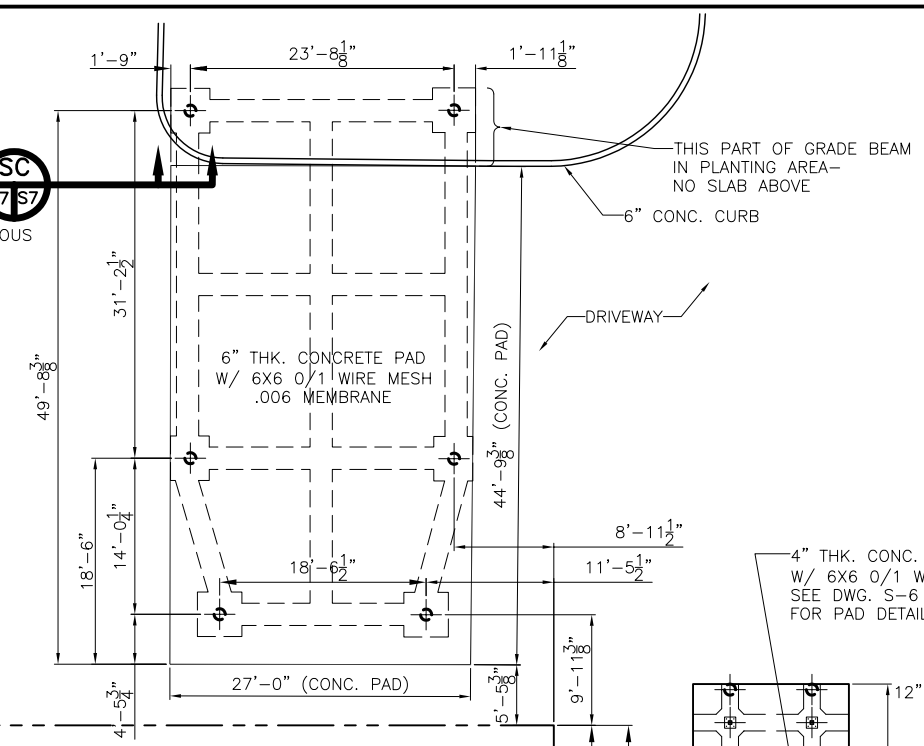

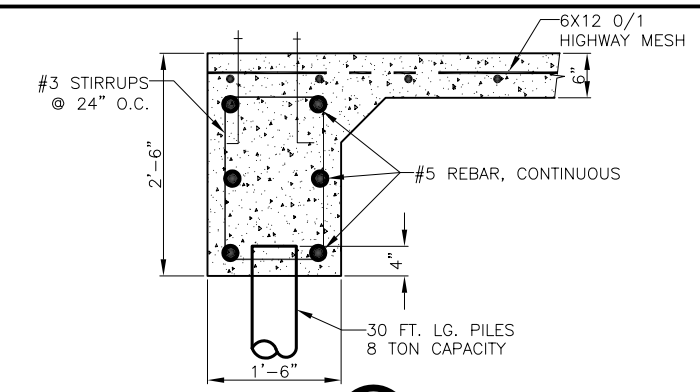

SECTION SD
SCALE: 1" = 1'-0"

NOTE:
PILINGS SHALL BE "SMALL TIMBER" TREATED PILE, 6" TIP, 8" BUTT, DRIVEN TO 30 FEET BELOW GRADE. (USE PILE CONNECTORS AS REQD.) LOAD CAPACITY 8 TONS EACH.
(SOIL BORING INFORMATION AVAILABLE FROM ENGINEERING OFFICE.)

PILE DRIVING IN STAIR TOWER AREAS WILL NEED TO BE ACCOMPLISHED UTILIZING A BOBCAT TRACTOR EQUIPPED WITH A HYDRAULIC PILE DRIVING RIG.

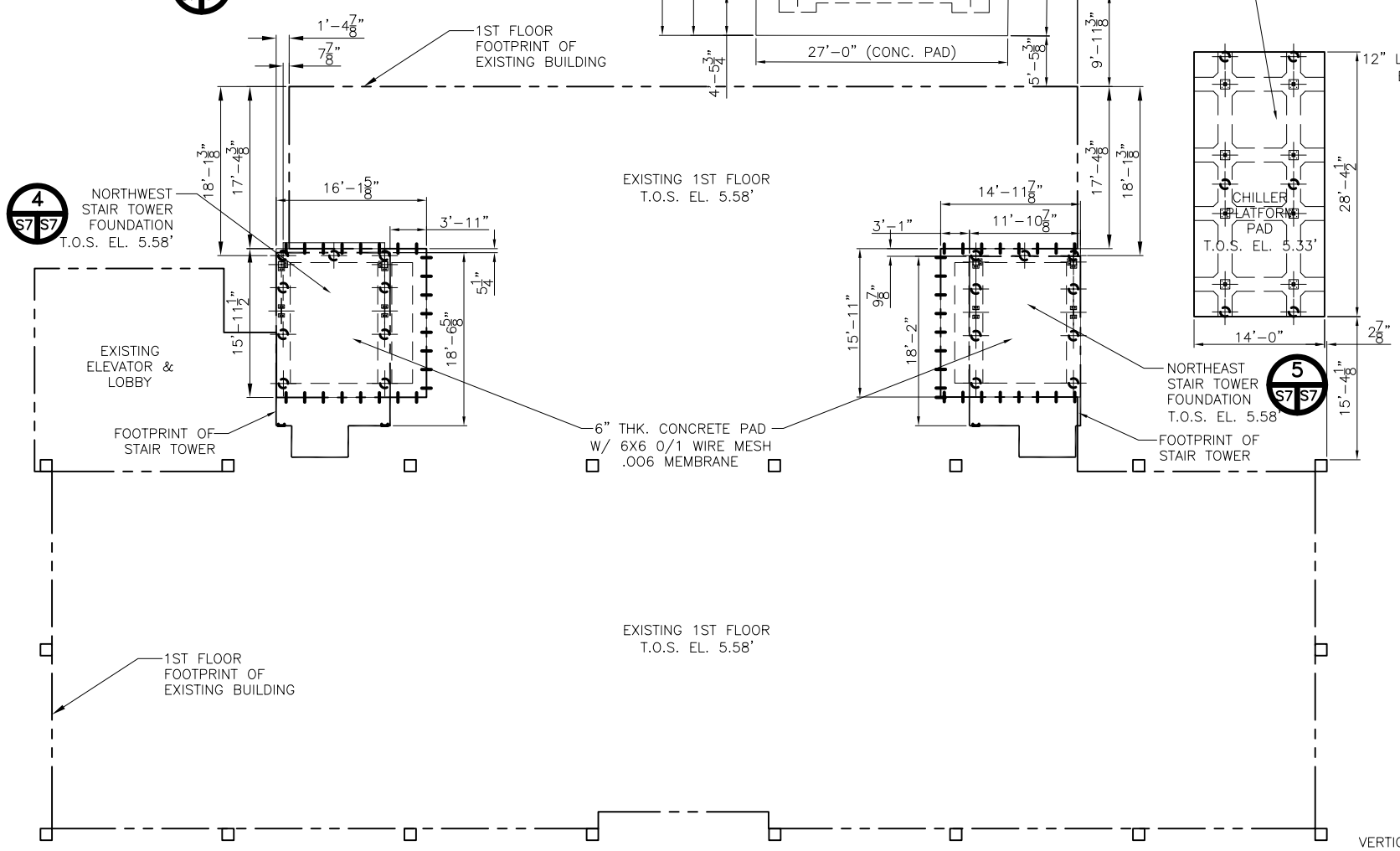

PILING & FOUNDATION PLAN
SCALE: 1/8" = 1'-0"

NOTE:
SEE DWG S-4 FOR STAIR TOWER FRAMING DETAILS.

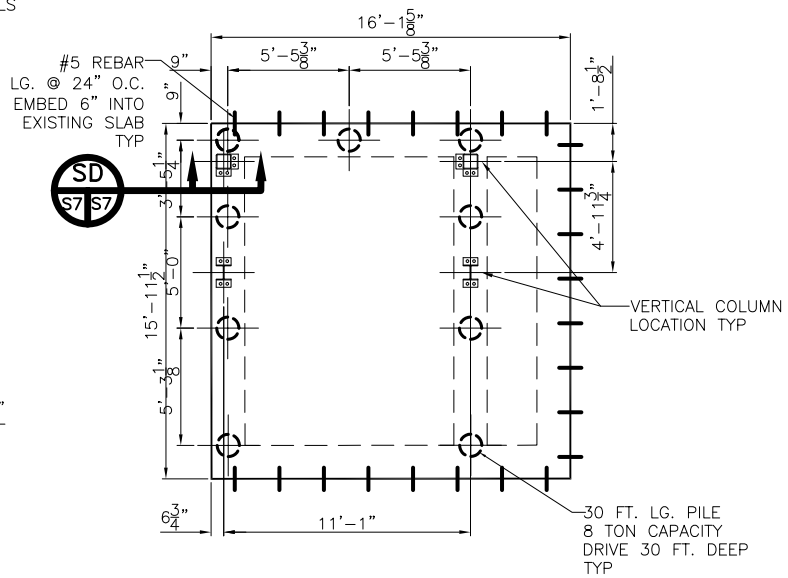

NORTHWEST STAIR TOWER FOUNDATION PLAN
SCALE: 1/4" = 1'-0"

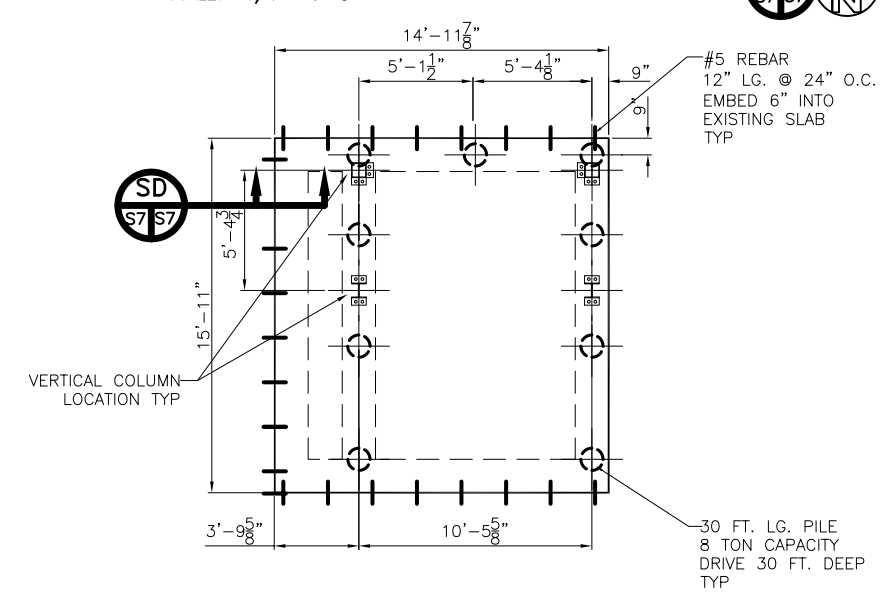

NORTHEAST STAIR TOWER FOUNDATION PLAN
SCALE: 1/4" = 1'-0"

NOTE:
CONTRACTOR TO PROVIDE SHOP DRAWINGS OF STAIRS AND STAIR TOWER STRUCTURE PRIOR TO CONSTRUCTION.

REVISED: 03/07/07ab
REVISED: 02/26/07

PILING & FOUNDATION PLAN

ST. TAMMANY PARISH ADMIN COMPLEX
520 OLD SPANISH TRAIL
SLIDELL, LOUISIANA

RENOVATE OFFICE BUILDING

DAMMON ENGINEERING, INC.
1095 FLORIDA AVENUE 985-649-5832 SLIDELL, LA. 70458
DAMMONENGINEERING.COM

SCALE:AS NOTED
FILE:
JOB NO.
DATE:1-8-07
SHEET
S-7
OF